LANDA® SLT/SLX

GASOLINE ENGINE

OPERATOR'S MANUAL

- **SLT5-30224E** 1.110-518.0
- **SLT6-32324E** 1.110-520.0
- **SLX10-25324E** 1.110-525.0
- **SLT8-30324E** 1.110-522.0

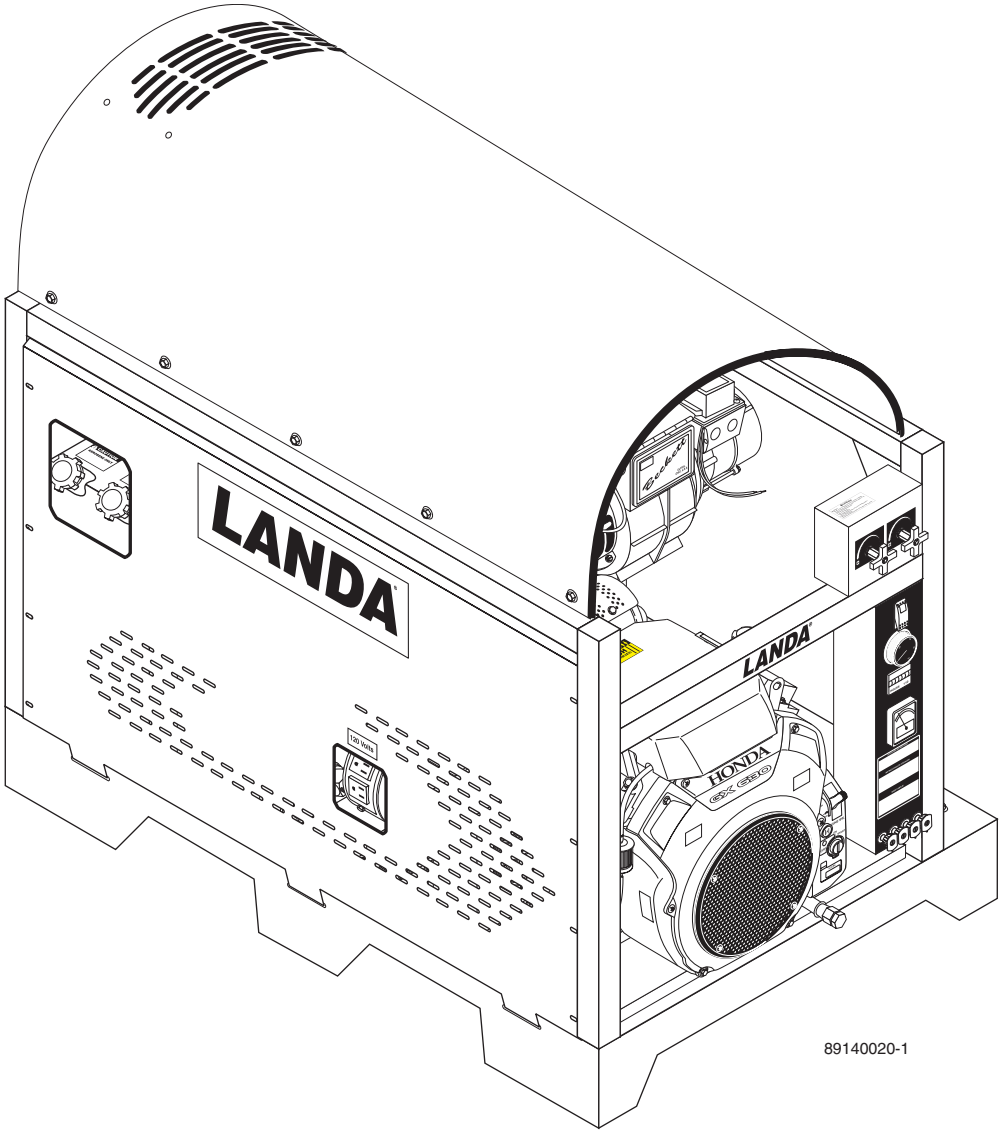

For technical assistance or the dealer nearest you,
consult our web page at **www.landa.com**

8.914-002.0

CONTENTS

Model Number _____

Serial Number _____

Date of Purchase _____

The model and serial numbers will be found on a decal attached to the pressure washer. You should record both serial number and date of purchase and keep in a safe place for future reference.

INTRODUCTION & IMPORTANT SAFETY INFORMATION

Thank you for purchasing this Pressure Washer.

We reserve the right to make changes at any time without incurring any obligation.

Owner/User Responsibility:

The owner and/or user must have an understanding of the manufacturer's operating instructions and warnings before using this pressure washer. Warning information should be emphasized and understood. If the operator is not fluent in English, the manufacturer's instructions and warnings shall be read to and discussed with the operator in the operator's native language by the purchaser/owner, making sure that the operator comprehends its contents.

Owner and/or user must study and maintain for future reference the manufacturers' instructions.

The operator must know how to stop the machine quickly and understand the operation of all controls. Never permit anyone to operate the engine without proper instructions.

This manual should be considered a permanent part of the machine and should remain with it if machine is resold.

When ordering parts, please specify model and serial number. Use only identical replacement parts.

This machine is to be used only by trained operators.

IMPORTANT SAFETY INFORMATION

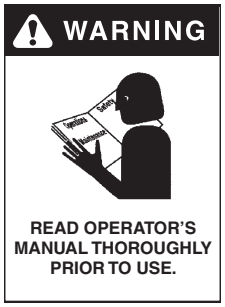

WARNING: To reduce the risk of injury, read operating instructions carefully before using.

1. Read the owner's manual thoroughly. Failure to follow instructions could cause malfunction of the machine and result in death, serious bodily injury and/or property damage.
2. Know how to stop the machine and bleed pressure quickly. Be thoroughly familiar with the controls.
3. Stay alert — watch what you are doing.

WARNING: Keep wand, hose, and water spray away from electric wiring or fatal electric shock may result.

4. All installations must comply with local codes. Contact your electrician, plumber, utility company or the selling distributor for specific details.

WARNING: This machine exceeds 85 db appropriate ear protection must be worn.

WARNING: High pressure spray can cause paint chips or other particles to become airborne and fly at high speeds. To avoid personal injury, eye, hand and foot safety devices must be worn.

5. Eye, hand, and foot protection must be worn when using this equipment.
6. Keep operating area clear of all persons.

WARNING: Flammable liquids can create fumes which can ignite, causing property damage or severe injury.

WARNING: Risk of explosion — Operate only where open flame or torch is permitted.

WARNING: Risk of fire — Do not add fuel when the product is operating or still hot.

WARNING: Do not use gasoline crankcase draining or oil containing gasoline, solvents or alcohol. Doing so will result in fire and/or explosion.

WARNING: Risk of fire — Do not Spray flammable liquids.

7. Allow engine to cool for 1-2 minutes before refueling. If any fuel is spilled, make sure the area is dry before testing the spark plug or starting the engine. (Fire and/or explosion may occur if this is not done.)

   Gasoline engines on mobile or portable equipment shall be refueled:

   a. outdoors;
   b. with the engine on the equipment stopped;
   c. with no source of ignition within 10 feet of the dispensing point; and
   d. with an allowance made for expansion of the fuel should the equipment be exposed to a higher ambient temperature.

In an overfilling situation, additional precautions are necessary to ensure that the situation is handled in a safe manner.

WARNING: Risk of injury. Disconnect battery ground terminal before servicing.

8. When in use , do not place machine near flammable objects as the engine is hot.
9. Oil burning appliances shall be installed only in locations where combustible dusts and flammable gases or vapors are not present. Do not store or use gasoline near this machine.
10. Use No. 1 or No. 2 heating oil (ASTM D306) only. **NEVER** use gasoline in your fuel oil tank. Gasoline is more combustible than fuel oil and could result in a serious explosion. **NEVER** use crankcase or waste oil in your burner. Fuel unit malfunction could result from contamination.
11. Do not confuse gasoline and fuel oil tanks. Keep proper fuel in proper tank.

WARNING: Risk of injury. Hot surfaces can cause burns. Use only designated gripping areas of spray gun and wand. Do not place hands or feet on non-insulated areas of the pressure washer.

12. Transport/Repair with fuel tank EMPTY or with fuel shut-off valve OFF.

CAUTION: Hot discharge fluid. Do not touch or direct discharge stream at persons.

WARNING: This machine produces hot water and must have insulated components attached to protect the operator.

13. To reduce the risk of injury, close supervision is necessary when a machine is used near children. Do not allow children to operate the pressure washer. **This machine must be attended during operation.**

WARNING: Grip cleaning wand securely with both hands before starting. Failure to do this could result in injury from a whipping wand.

14. Never make adjustments on machine while in operation.
15. Be certain all quick coupler fittings are secured before using pressure washer.

WARNING: High pressure developed by these machines will cause personal injury or equipment damage. Keep clear of nozzle. Use caution when operating. Do not direct discharge stream at people, or severe injury or death will result.

WARNING: Protect machine from freezing.

16. To keep machine in best operating conditions, it is important you protect machine from freezing. Failure to protect machine from freezing could cause malfunction of the machine and result in death, serious bodily injury, and/or property damage. Follow storage instructions specified in this manual.
17. Inlet water must be clean fresh water and no hotter then 90°F.

WARNING: Risk of asphyxiation. Use this product only in a well ventilated area.

18. Avoid installing machines in small areas or near exhaust fans. Adequate oxygen is needed for combustion or dangerous carbon monoxide will result.
19. Manufacturer will not be liable for any changes made to our standard machines or any components not purchased from us.
20. The best insurance against an accident is precaution and knowledge of the machine.

WARNING: Be extremely careful when using a ladder, scaffolding or any other relatively unstable location. The cleaning area should have adequate slopes and drainage to reduce the possibility of a fall due to slippery surfaces.

IMPORTANT SAFETY INFORMATION

21. Do not allow acids, caustic or abrasive fluids to pass through the pump.
22. Never run pump dry or leave spray gun closed longer than 1-2 minutes.
23. Machines with shut-off spray gun should not be operated with the spray gun in the off position for extensive periods of time as this may cause damage to the pump.
24. Protect discharge hose from vehicle traffic and sharp objects. Inspect condition of high pressure hose before using or bodily injury may result.
25. Before disconnecting discharge hose from water outlet, turn burner off and open spray gun to allow water to cool below 100° before stopping the machine. Then open the spray gun to relieve pressure. Failure to properly cool down or maintain the heating coil may result in a steam explosion.
26. Do not overreach or stand on unstable support. Keep good footing and balance at all times.
27. Do not operate this machine when fatigued or under the influence of alcohol, prescription medications, or drugs.
28. In oil burning models, use only kerosene, No. 1 home heating fuel, or diesel. If diesel is used, add a soot remover to every tankful.

Follow the maintenance instructions specified in the manual.

COMPONENT IDENTIFICATION

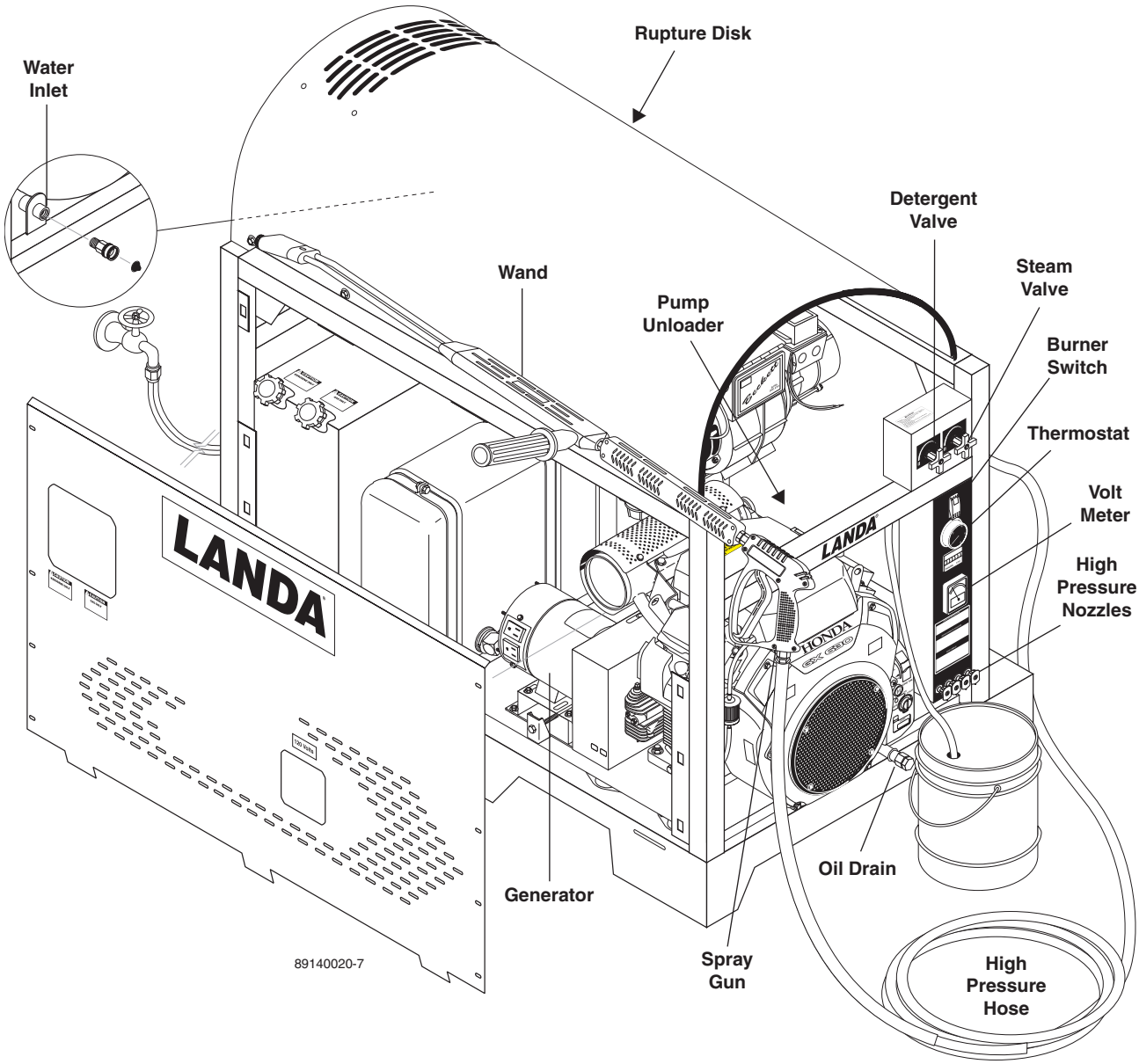

Pump — Delivers a specific gpm to the high pressure nozzle which develops pressure (not shown).

Spray Gun — Controls the application of water and detergent onto cleaning surface with trigger device. Includes safety latch.

Detergent Valve — Allows you to siphon and mix detergents.

Wand — Must be connected to the spray gun.

High Pressure Hose — Connect one end to water pump high pressure discharge nipple and the other end to spray gun.

Rupture Disk — Secondary pressure release in the unlikely event the unloader valve fails.

Unloader Valve — Safety device which, when the spray gun closes, prevents over pressurization.

Generator — Provides 110V power to the burner assembly.

NOTE: **If trigger on spray gun is released for more than 2 minutes, water will leak from the pump protector. Warm water will discharge from pump protector onto floor. This system prevents internal pump damage.**

ASSEMBLY INSTRUCTIONS

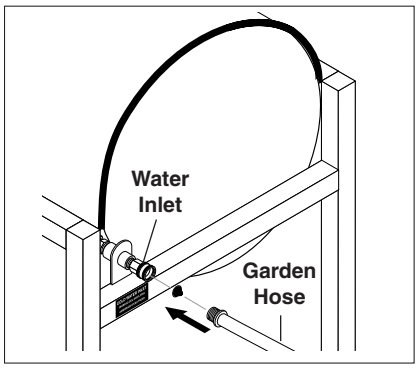

STEP 1: Attach a 5/8" water supply hose to inlet connector. Minimum flow should be 10 GPM depending on model of machine.

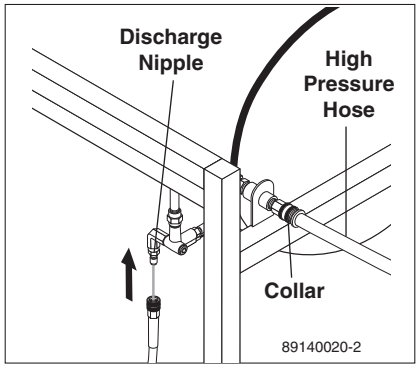

STEP 2: Attach high pressure hose to discharge nipple using quick coupler. Lock coupler securely by pulling back coupler collar, inserting onto discharge nipple and pushing collar forward until secure.

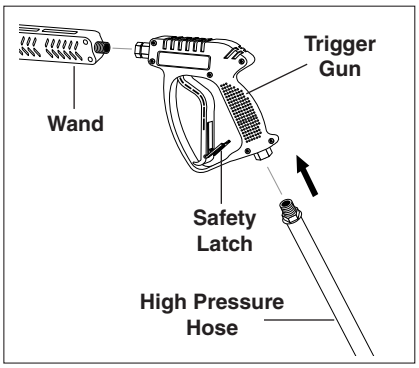

STEP 3: Attach variable pressure control wand to spray gun using teflon tape on threads to prevent leakage.

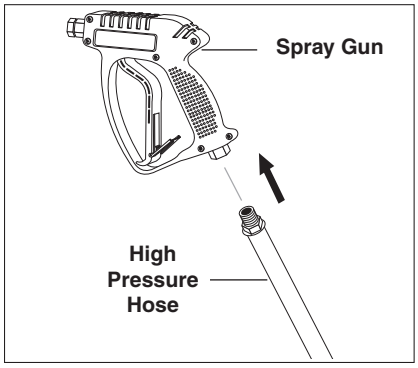

STEP 4: Attach the high pressure hose to the spray gun using teflon tape on hose threads.

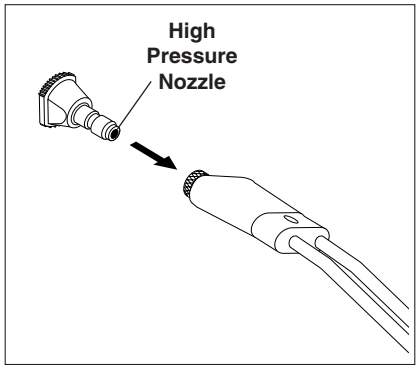

STEP 5: Before installing nozzle, turn on water supply and run machine allowing water to flush through the system until clear. Pull the spring-loaded collar of the wand coupler collar back to insert your choice of pressure nozzle. ***Caution: Never replace nozzles without engaging the safety latch on the spray gun trigger.***

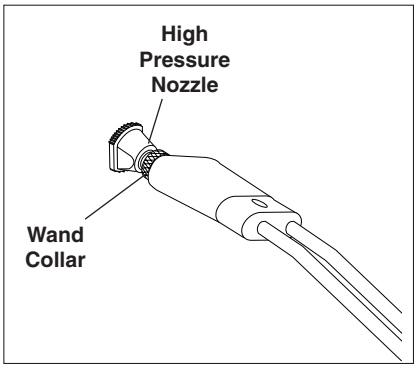

STEP 6: Release the coupler collar and push the nozzle until the collar clicks. Pull the nozzle to make sure it is seated properly.

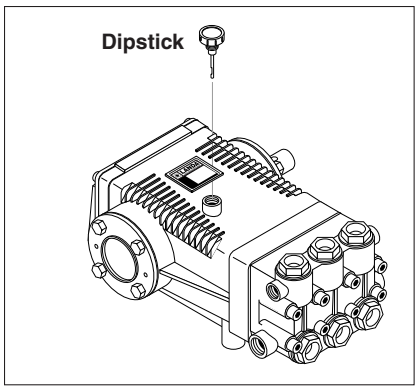

STEP 7: Check oil level by using supplied dip-stick. Use SAE 30W non-detergent only.

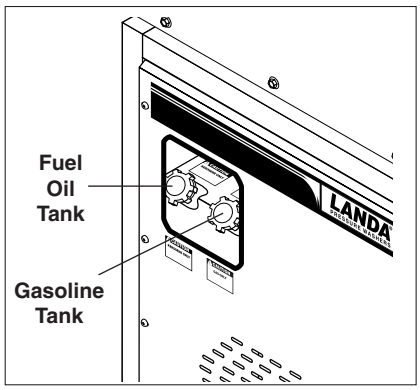

STEP 8: Fill gasoline tank and check engine oil level. Fill fuel oil tank. Do not confuse gasoline and fuel oil tanks. Keep proper fuel in proper tank.

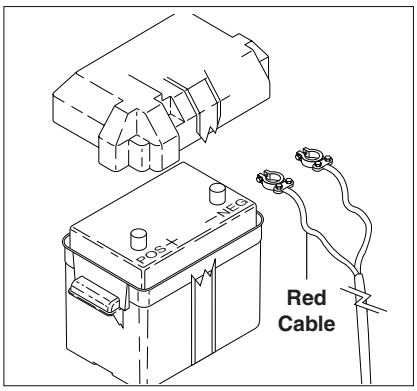

STEP 9: Install proper battery making sure that the red cable is attached to the positive terminal. Use a 12V group 24 style battery.

OPERATING INSTRUCTIONS

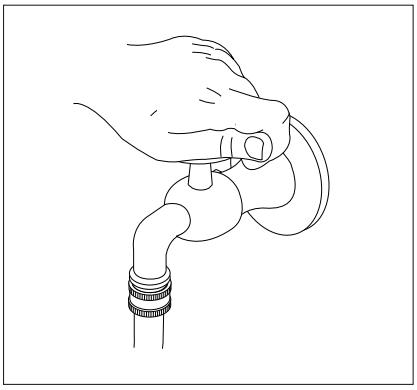

STEP 1: Read engine warning and operating instructions prior to turning on the water. Check for water leaks; tighten as needed.

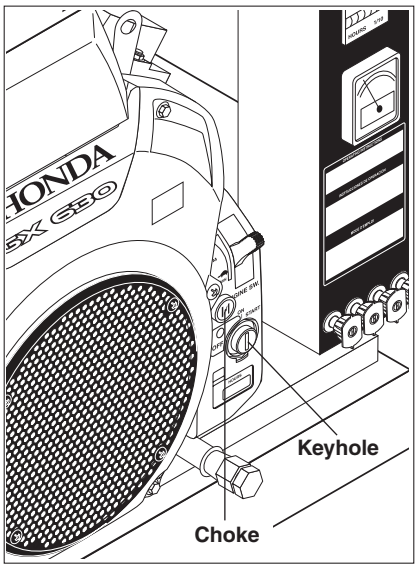

STEP 2: Read engine manual provided and pull choke. Pull spray gun trigger to relieve pressure. Then turn the engine switch to the START position and hold it there until the engine starts. **NOTE**: Do not engage the electric starter for more than five (5) seconds at a time. If the engine fails to start, release the switch, pull spray gun trigger and wait ten seconds before operating the starter again. When the engine starts, allow the engine switch to return to the ON position. Push the choke in.

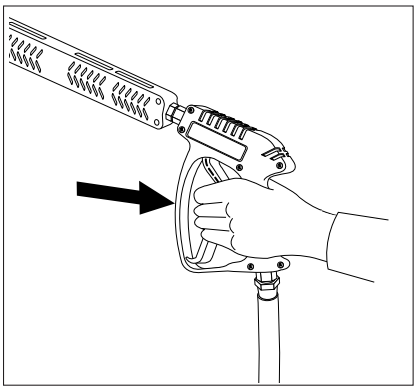

STEP 3: With the spray nozzle pointed away from you or anybody else, press the trigger on the spray gun to obtain pressurized cold water spray.

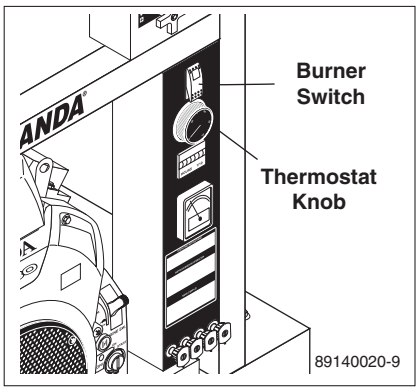

STEP 4: For hot water, turn the thermostat knob to 210° then push the burner switch to ON when a steady stream of water flows out of the spray gun. Burner will now light automatically. **NOTE:** Do not start machine with burner switch on.

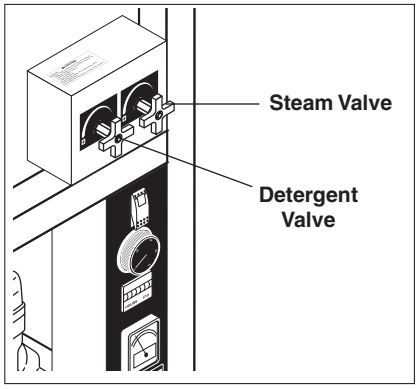

STEP 6: For steam, open the steam valve counterclockwise. This lowers the pressure and raises the temperature.

OPERATING INSTRUCTIONS CONTINUED

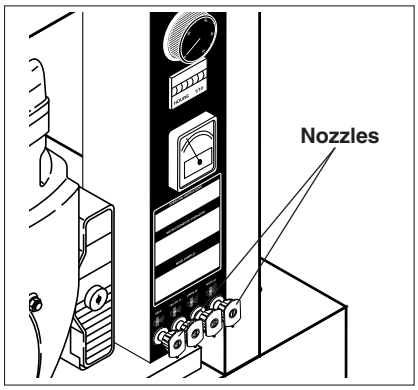

STEP 7: The four color-coded quick connect nozzles provide a wide array of spray widths from 0° to 45° and are easily accessible when placed in the convenient rubber nozzle holder, which is provided on the front of the machine.

NOTE: For a more gentle rinse, select the white 40° or green 25° nozzle. To scour the surface, select the yellow 15° or red 0° nozzle.

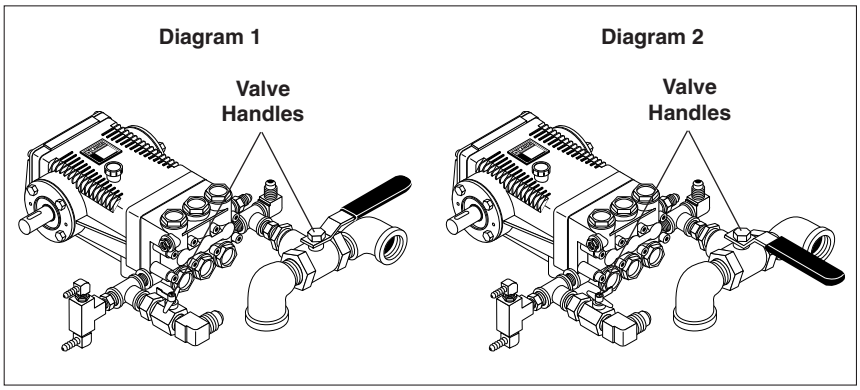

STEP 8: Position valve handles as shown in diagram 1 for float tank operation and as shown in diagram 2 for external water tank operation.

DETERGENTS AND GENERAL WASHING TECHNIQUES

WARNING: Some detergents may be harmful if inhaled or ingested, causing severe nausea, fainting or poisoning. The harmful elements may cause property damage or severe injury.

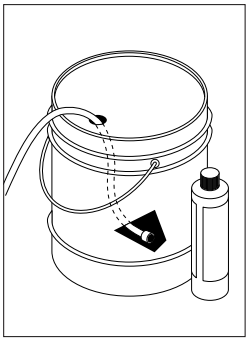

STEP 1: Use detergent designed specifically for pressure washers. Household detergents could damage the pump. Prepare detergent solution as required by the manufacturer. Fill a container with pressure washer detergent. Place the filter end of detergent suction tube into the detergent container. Turn detergent valve counterclockwise to open.

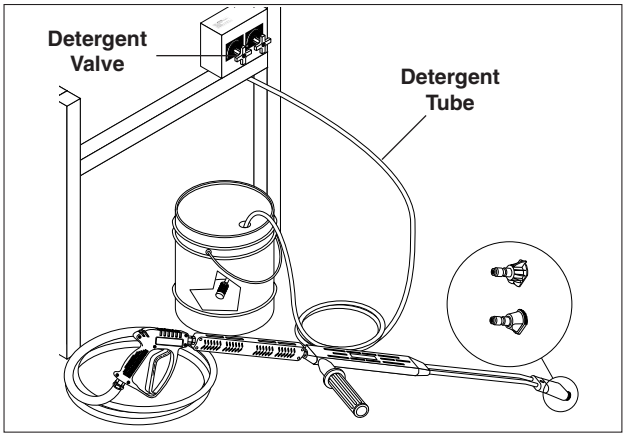

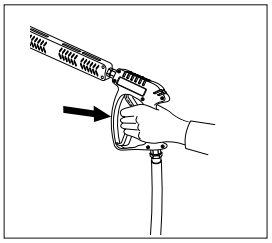

STEP 2: With the engine running, pull trigger to operate machine. Liquid detergent is drawn into the machine and mixed with water. Apply detergent to work area. Do not allow detergent to dry on surface.

IMPORTANT: You must flush the detergent after each use by placing the suction tube into a bucket of clean water, open detergent valves then run the pressure washer for 1-2 minutes. Then turn detergent valve clockwise to close, to prevent air from entering pump.

THERMAL PUMP PROTECTION

If you run your pressure washer for 3-5 minutes without pressing the trigger on the spray gun, circulating water in the pump can reach high temperatures. When the water reaches this temperature, the pump protector engages and cools the pump by discharging the warm water onto the ground. This thermal device prevents internal damage to the pump.

CLEANING TIPS

Pre-rinse cleaning surface with fresh water. Place detergent suction tube directly into cleaning solution and apply to surface at low pressure (for best results, limit your work area to sections approximately 6 feet square and always apply detergent from bottom to top). Allow detergent to remain on surface 1-3 minutes. Do not allow detergent to dry on surface. If surface appears to be drying, simply wet down surface with fresh water. If needed, use brush to remove stubborn dirt. Rinse at high pressure from top to bottom in an even sweeping motion keeping the spray nozzle approximately 1 foot from cleaning surface. Use overlapping strokes as you clean and rinse any surface. For best surface cleaning action spray at a slight angle.

Recommendations:

- Before cleaning any surface, an inconspicuous area should be cleaned to test spray pattern and distance for maximum cleaning results.
- If painted surfaces are peeling or chipping, use extreme caution as pressure washer may remove the loose paint from the surface.
- Keep the spray nozzle a safe distance from the surface you plan to clean. High pressure wash a small area, then check the surface for damage. If no damage is found, continue to pressure washing.

CAUTION - Never use:

- Bleach, chlorine products and other corrosive chemicals
- Liquids containing solvents (i.e., paint thinner, gasoline, oils)
- Tri-sodium phosphate products
- Ammonia products
- Acid-based products

These chemicals will harm the machine and will damage the surface being cleaned.

RINSING

It will take a few seconds for the detergent to clear. Apply safety latch to spray gun and close detergent valve. Select and install the desired high pressure nozzle.

SHUTTING DOWN AND CLEAN-UP

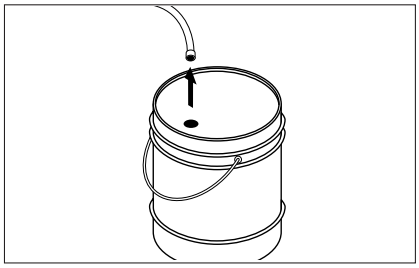

STEP 1: Remove detergent suction tube from container and insert into one gallon of fresh water. Open detergent valve, pull spray gun trigger and siphon water for one minute.

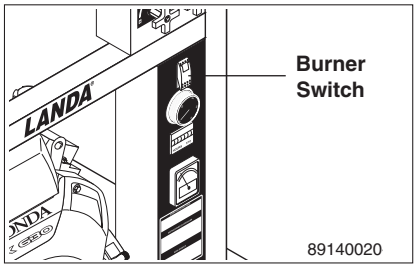

STEP 2: Turn burner switch off and continue spraying, allowing the water to cool to below 100°.

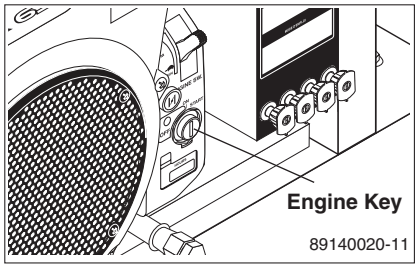

STEP 3: Turn engine key switch off.

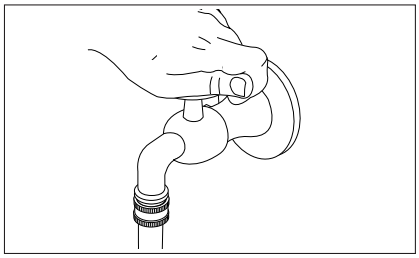

STEP 4: Turn off water supply.

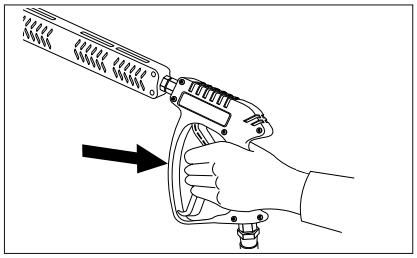

STEP 5: Squeeze trigger on spray gun to relieve remaining pressure.

STORAGE

CAUTION: Always store your pressure washer in a location where the temperature will not fall below 32°F (0°C). The pump in this machine is susceptible to permanent damage if frozen. FREEZE DAMAGE IS NOT COVERED BY WARRANTY.

1. Stop the pressure washer, squeeze spray gun trigger to release pressure.
2. Detach water supply hose and high pressure hose.
3. Turn on the machine for a few seconds, until remaining water exits. Turn engine off immediately.
4. Drain the gas and oil from the engine.
5. Do not allow high pressure hose to become kinked.
6. Store the machine and accessories in a room which does not reach freezing temperatures.

CAUTION: Failure to follow the above directions will result in damage to your pressure washer.

When the pressure washer is not being operated or is being stored for more than one month, follow these instructions:

1. Replenish engine oil to upper level.
2. Drain gasoline from fuel tank, fuel line, fuel valve and carburetor.
3. Pour about one teaspoon of engine oil through the spark plug hole, pull the starter grip several times and replace the plug. Then pull the starter grip slowly until you feel increased pressure which indicates the piston is on its compression stroke and leave it in that position. This closes both the intake and exhaust valves to prevent rusting of cylinder.
4. Cover the pressure washer and store in a clean, dry place that is well ventilated away from open flame or sparks. **NOTE:** The use of a fuel additive, such as STA-BIL®, or an equivalent, will minimize the formulation of fuel deposits during storage. Such additives may be added to the gasoline in the fuel tank of the engine, or to the gasoline in a storage container.

After Extended Storage

CAUTION: Prior to restarting, thaw out any possible ice from pressure washer hoses, spray gun or wand.

Engine Maintenance

During the winter months, rare atmospheric conditions may develop which will cause an icing condition in the carburetor. If this develops, the engine may run rough, lose power and may stall. This temporary condition can be overcome by deflecting some of the hot air from the engine over the carburetor area. **NOTE:** Refer to the engine manufacturer's manual for service and maintenance of the engine.

PREVENTATIVE MAINTENANCE

- Check to see that water pump is properly lubricated.
- Follow winterizing instructions to prevent freeze damage to pump and coils.
- Always neutralize and flush detergent from system after use.
- If water is known to be high in mineral content, use a water softener on your water system, or de-scale as needed.
- Do not allow acidic, caustic or abrasive fluids to be pumped through system.
- Always use high grade quality cleaning products.
- Never run pump dry for extended periods of time.
- Use clean fuel-kerosene, No. 1 fuel oil, or diesel. Clean or replace fuel filter every 100 hours of operation. Avoid water contaminated fuel as it will damage the fuel pump.
- If machine is operated with smoky or eye burning exhaust, coils soot up and prevent water from reaching maximum operating temperature. (See section on Burner Adjustments.)
- Never allow water to be sprayed on or near the engine or burner assembly or any electrical component.
- Periodically delime coils per instructions.
- Check to see that engine is properly lubricated.

It is advisable, periodically, to visually inspect the burner. Check air inlet to make sure it is not clogged or blocked. Wipe off any oil spills and keep this equipment clean and dry.

The flow of combustion and ventilating air to the burner must not be blocked or obstructed in any manner.

The area around the Landa washer should be kept clean and free of combustible materials, gasoline and other flammable vapors and liquids.

Unloader Valves

Unloader valves are preset and tested at the factory before shipping. Tampering with factory setting may cause personal injury and/or property damage, and will void the manufacturer's warranty.

Winterizing Procedure

Damage due to freezing is not covered by warranty. Adhere to the following cold weather procedures whenever the washer must be stored or operated outdoors under freezing conditions.

During winter months, when temperatures drop below 32°F, protecting your machine against freezing is necessary. Store the machine in a heated room. If this is not possible then mix a 50/50 solution of antifreeze and water in the float tank. Turn the engine on to siphon the antifreeze mixture through the machine. If compressed air is available, an air fitting can be screwed into the float tank by removing the float tank strainer and fitting. Inject the compressed air. Water will be blown out of the machine when the trigger on the spray gun is opened.

High Limit Hot Water Thermostat

For safety, each machine is equipped with a temperature sensitive high limit control switch. In the event that the water should exceed its operating temperature, the high limit control will turn the burner off until the water cools then automatically reset itself. The thermostat sensor is located on the discharge side of the heating coil. The thermostat control dial is located on the control panel.

Pumps

Use only SAE 30 weight non-detergent oil. Change oil after first 50 hours of use. Thereafter, change oil every three months or at 500 hour intervals. Oil level should be checked through use of dipstick found on top of pump, or the red dot visible through the oil gauge window. Oil should be maintained at that level.

Cleaning of Coils

In alkaline water areas, lime deposits can accumulate rapidly inside the heating coil. This growth is increased by the extreme heat build up in the coil. The best prevention for liming conditions is to use high quality cleaning chemicals. In areas where alkaline water is an extreme problem, periodic use of Landa Deliming Powder (Landa Part #9-028008) will remove lime and other deposits before coil becomes plugged.

Deliming Coils

Periodic flushing of coils or optional float tank is recommended.

Step 1 Fill a container with 4 gallons of water, then add 1 lb. of deliming powder. Mix thoroughly. Pour mixture into float tank.

Step 2 Remove wand assembly from spray gun and put spray gun into float tank. Secure the trigger on the spray gun into the open position.

Step 3 Turn engine on, allowing solution to be pumped through coils back into the float tank. The solution should be allowed to circulate 2-4 hours or until the color changes.

MAINTENANCE & SERVICE

Step 4 After circulating solution, flush the entire system with fresh water. Clean out float tank and then reinstall wand assembly to spray gun.

Removal of Soot and Heating Coil

In the heating process, fuel residue in the form of soot deposits may develop on the heating coil pipe and block air flow which will affect burner combustion. When soot has been detected on visual observation, the soot on the coil must be washed off after following the coil removal steps (See Coil Removal–page 16).

Pressure Relief Valve

Each machine is equipped with a relief valve to relieve pressure in the system when higher than normal operating pressures are encountered or if the unloader valve should fail. Unusually high pressures come from an object plugging the spray nozzle. If operating pressure is found to be normal and the relief valve continues to leak, repair or replace valve. **CAUTION: This valve must be opened each year to check operation.**

Rupture Disk

If pressure from pump or thermal expansion should exceed safe limits, the rupture disk will burst, allowing high pressure to be discharged through hose to ground. The ruptured disk needs to be inspected once or twice a year for any obstructions.

Fuel

Use clean fuel oil that is not contaminated with water and debris. Replace fuel filter and drain tank every 100 hours of operation.

Use No. 1 or No. 2 heating oil (ASTM D306) only. **NEVER** use gasoline in your burner fuel tank. Gasoline is more combustible than fuel oil and could result in a serious explosion. **NEVER** use crankcase or waste oil in your burner. Fuel unit malfunction could result from contamination.

Fuel Control System

This machine utilizes a fuel solenoid valve located on the fuel pump to control the flow of fuel to the combustion chamber. The solenoid, which is normally closed, is activated by a flow switch when water flows through it. When the operator releases the trigger on the spray gun, the flow of water through the flow switch stops, turning off the electrical current to the fuel solenoid.

The solenoid then closes, shutting off the supply of fuel to the combustion chamber. Controlling the flow of fuel in this way gives an instantaneous burn-or-no-burn situation, thereby eliminating high and low water temperatures, and combustion smoke normally associated with machines incorporating a spray gun.

CAUTION: Periodic inspection, to insure that the fuel solenoid valve functions properly, is recommended. This can be done by operating the machine and checking to see that the burner is not firing when the spray gun is in the off position.

Fuel Pressure Adjustment

To control water temperature, adjust fuel pressure by turning the regulating pressure adjusting screw clockwise to increase, counterclockwise to decrease. Do not exceed 200 psi. **NOTE:** When changing fuel pump, a bypass plug must be installed in return port or fuel pump will not prime.

ELECTRODE SETTING: WAYNE

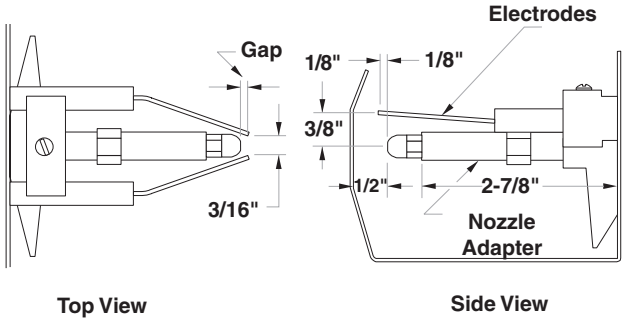

Periodically check wiring connections. If necessary to adjust electrodes use diagram.

ELECTRODE SETTING: BECKETT

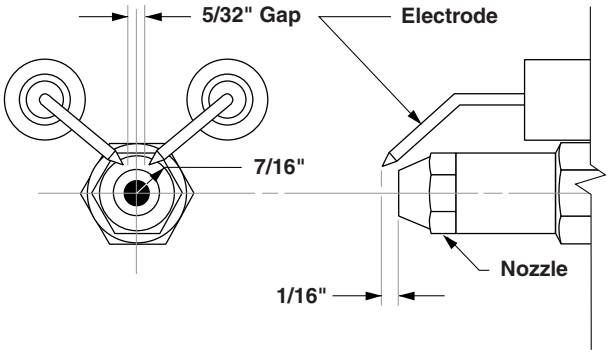

Burner Nozzle

Keep the tip free of surface deposits by wiping it with a clean, solvent-saturated cloth, being careful not to plug or enlarge the nozzle. For maximum efficiency, replace the nozzle each season.

Air Adjustment

The oil burner on this machine is preset for operation at altitudes below 1000 feet. If operated at higher altitudes, it may be necessary to adjust the air band setting. Adjust air band for a #1 or # 2 smoke spot on the Bacharach scale. A one-time initial correction for your location will pay off in economy, performance, and extended service life. If a smoky or eye-burning exhaust is being emitted from the stack, two things should be checked. First, check the fuel to be certain that kerosene or No. 1 home heating fuel is being used. Next, check the air adjustment on the burner.

Adjustment

To adjust: start machine and turn burner ON. Loosen two locking screws found in the air shutter openings (refer to illustration) and close air shutter until black smoke appears from burner exhaust vent. Note air band position. Next, slowly open the air shutter until white smoke just starts to appear. Turn air shutter halfway back to the black smoke position previously noted. Tighten locking screws.

If the desired position cannot be obtained using only the air shutter, lock the air shutter in as close a position as can be obtained, then repeat the above procedure on the air band setting.

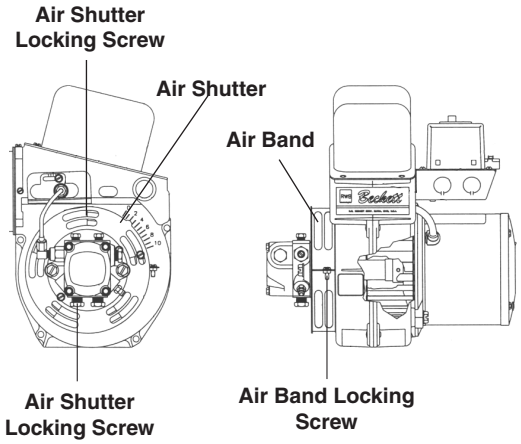

Coil Removal

Coil removal, because of freeze breakage or to clean soot from it, can be done quickly and easily.

1. Disconnect hose from pump to inlet side of the coil.
2. Carefully disconnect the thermostat sensor making sure you do not crimp the capillary tube.
3. Remove burner assembly from combustion chamber.
4. Remove the 3-3/8" bolts from each side of coil and tank assembly (these bolts are used to fasten tank to chassis).
5. Remove fittings connected to the 1/2" pipe nipples from inlet and discharge sides of coil.
6. Remove top tank wrap, bend back insulation tabs and fold back blanket.
7. Remove bolts that hold down coil to bottom wrap.
8. Remove coil.
9. Replace or repair the coil and any insulation found to be broken or torn.
10. Remove insulation retainer plates.

Coil Reinstallation

Reinstall new or cleaned coil reversing Steps 9 through 1.

TROUBLESHOOTING

PROBLEM	POSSIBLE CAUSE	SOLUTION
LOW OPERATING PRESSURE	Faulty pressure gauge	Install new gauge.
	Insufficient water supply	Use larger supply hose; clean filter at water inlet.
	Old, worn or incorrect spray nozzle	Match nozzle number to machine and/or replace with new nozzle.
	Belt slippage	Tighten or replace; use correct belt.
	Plumbing or hose leak	Check plumbing system for leaks. Retape leaks with teflon tape.
	Faulty or misadjusted unloader valve	Adjust unloader for proper pressure. Install repair kit when needed.
	Worn packing in pump	Install new packing kit.
	Fouled or dirty inlet or discharge valves in pump	Clean inlet and discharge valves.
	Worn inlet or discharge valves	Replace with valve kit.
	Leaking pressure control valve	Rebuild or replace as needed.
	Slow engine RPM	Set engine speed at proper specifications.
	Pump sucking air	Check water supply and possibility of air seepage.
	Gasoline Engine Altitude	The gasoline engine is preset for operation at altitudes below 1000 feet above sea level. If operated at higher altitudes, it may be necessary to install a high altitude main jet in the carburetor. Contact your local authorized engine sales and service center for details.
	Valves sticking	Check and clean or replace if necessary.
	Unloader valve seat faulty	Check and replace if necessary.
BURNER WILL NOT LIGHT	Little or no fuel	Fill tank with fuel.
	Improper fuel or water in fuel	Drain fuel tank and fill with proper fuel.
	Clogged fuel line	Clean or replace.
	Plugged fuel filter	Replace as needed.
	Misadjusted burner air bands	Replace air bands for clean burn.
	Little or no fuel pressure from fuel pump	Increse fule pressure to specifications and/or replace fuel pump. Test with pressure gauge.
	Faulty burner transformer	Test transformer for proper arc between contacts. Replace as needed.
	Disconnected or short in electrical wiring	All wire contacts should be clean and tight. No breaks in wires.
	Flex coupling slipping on fuel pump shaft or burner motor shaft	Replace if needed.
	On-Off switch defective	Check for electrical current reaching burner assembly with burner switch on.
	Heavy sooting on coil and burner can cause interruption of air flow and shorting of electrodes	Clean as required.
(Continued on next page)	Improper electrode setting	Check and reset according to diagram in Operator's Manual

TROUBLESHOOTING

PROBLEM	POSSIBLE CAUSE	SOLUTION
BURNER WILL NOT LIGHT *(continued from previous page)*	Fuel reaching combustion chamber	Check fuel pump for proper flow. Check solenoid flow switch on machines with spray gun control, for proper on-off fuel flow control.
	Clogged burner nozzle	Clean as required.
	Thermostat faulty or slow engine speed	Increase engine RPM to increase voltage.
	Flow switch malfunction	Remove, test for continuity and replace as needed.
	Flow solenoid malfunction	Replace if needed.
FLUCTUATING PRESSURE	Valves worn	Check and replace if necessary.
	Blockage in valve	Check and replace if necessary.
	Pump sucking air	Check water supply and air seepage at joints in suction line.
	Worn piston packing	Check and replace if necessary.
	Gasoline Engine Altitude	The gasoline engine is preset for operation at altitudes below 1000 feet above sea level. If operated at higher altitudes, it may be necessary to install a high altitude main jet in the carburetor. Contact your local authorized engine sales and service center for details.
MACHINE SMOKES	Improper fuel or water in fuel	Drain tank and replace contaminated fuel.
	Improper air adjustment	Readjust air bands on burner asssembly.
	Low fuel pressure	Adjust fuel pump pressure to specifications.
	Plugged or dirty burner nozzle	Replace nozzle.
	Faulty burner nozzle spray pattern	Replace nozzle.
	Heavy accumulation of soot on coils and burner assembly	Remove coils and burner assembly, clean thoroughly.
	Obstruction in smoke stack	Check for insulation blockage or other foreign objects.
	Low engine RPM	Increase RPM.
LOW WATER TEMPERATURE	Improper fuel or water in fuel	Replace with clean and proper fuel.
	Low fuel pressure	Increase fuel pressure.
	Weak fuel pump	Check fuel pump pressure. Replace pump if needed.
	Fuel filter partially clogged	Replace as needed.
	Soot build-up on coils not allowing heat transfer	Clean coils.
	Improper burner nozzle	See specifications.

TROUBLESHOOTING

PROBLEM	POSSIBLE CAUSE	SOLUTION
PUMP NOISY	Air in suction line	Check water supply and connections on suction line.
	Broken or weak inlet or discharge valve springs	Check and replace if necessary.
	Excessive matter in valves	Check and clean if necessary.
	Worn bearings	Check and replace if necessary.
PRESENCE OF WATER IN OIL	Oil seal worn	Check and replace if necessary.
	High humidity in air	Check and change oil twice as often.
WATER DRIPPING FROM UNDER PUMP	Piston packing worn	Check and replace if necessary.
	O-Ring plunger retainer worn	Check and replace if necessary.
	Cracked piston	Check and replace if necessary.
	Pump protector	Lower water supply pressure. Do not run with spray gun closed longer than 5 minutes.
OIL DRIPPING	Oil seal worn	Check and replace if necessary.
EXCESSIVE VIBRATION IN DELIVERY LINE	Irregular functioning of the valves	Check and replace if necessary.
DETERGENT NOT DRAWING	Air leak	Tighten all clamps. Check detergent lines for holes.
	Restrictor in float tank is missing	Replace restrictor. Check for proper orifice in restrictor.
	Filter screen on detergent suction hose plugged	Clean or replace.
	Dried up detergent plugging metering valve	Disassemble and clean thoroughly.
	High viscosity of detergent	Dilute detergent to specifications.
	Hole in detergent line(s)	Repair hole.
	Low detergent level	Add detergent, if needed.
BURNER MOTOR WILL NOT RUN	Fuel pump seized	Replace fuel pump.
	Burner fan loose or misaligned	Position correctly, tighten set screw.
	Defective control switch	Replace switch.
	Loose wire	Check and replace or tighten wiring.
	Defective burner motor	Replace motor.
RELIEF VALVE/ RUPTURE DISK LEAKS WATER	Excessive pressure, thermal expansion	Replace or repair

PREVENTATIVE MAINTENANCE

This pressure washer was produced with the best available materials and quality craftsmanship. However, you as the owner have certain responsibilities for the correct care of the equipment. Attention to regular preventative maintenance procedures will assist in preserving the performance of your equipment. Contact your dealer for maintenance. Regular preventative maintenance will add many hours to the life of your pressure washer. Perform maintenance more often under severe conditions.

MAINTENANCE SCHEDULE		
Engine Oil	Inspect	Daily
	Change	Every 25 hours
	Filter	Every 50 hours
Air Cleaner	Inspect	Every 50 hours or monthly
	Clean	Every 3 months
Battery Level		Check monthly
Engine Fuel Filter		500 hours or 6 months
Spark Plug Maintenance		500 hours or 6 months
Clean Fuel Tank(s)		Annually
Replace Fuel Lines		Annually
Pump Oil (Non-detergent 10/40W)	Inspect	Oil level daily
	Change	After first 50 hours, then every 500 hours or annually
Clean Burner Filter		Monthly (More often if fuel quality is poor)
Remove Burner Soot		Annually
Burner Adjustment/Cleaning		Annually
Replace Burner Nozzle		Annually
Descale Coil		Annually (More often if required)
Replace High Pressure Nozzle		Every 6 months
Replace Quick Connects		Annually
Clean Water Screen/Filter		Weekly
Replace HP Hose		Annually

OIL CHANGE RECORD

DATE OIL CHANGED MONTH/DAY/YEAR	ESTIMATED OPERATING HOURS SINCE LAST OIL CHANGE

DATE OIL CHANGED MONTH/DAY/YEAR	ESTIMATED OPERATING HOURS SINCE LAST OIL CHANGE

EXPLODED VIEW - COIL/BURNER ASSEMBLY - SLT

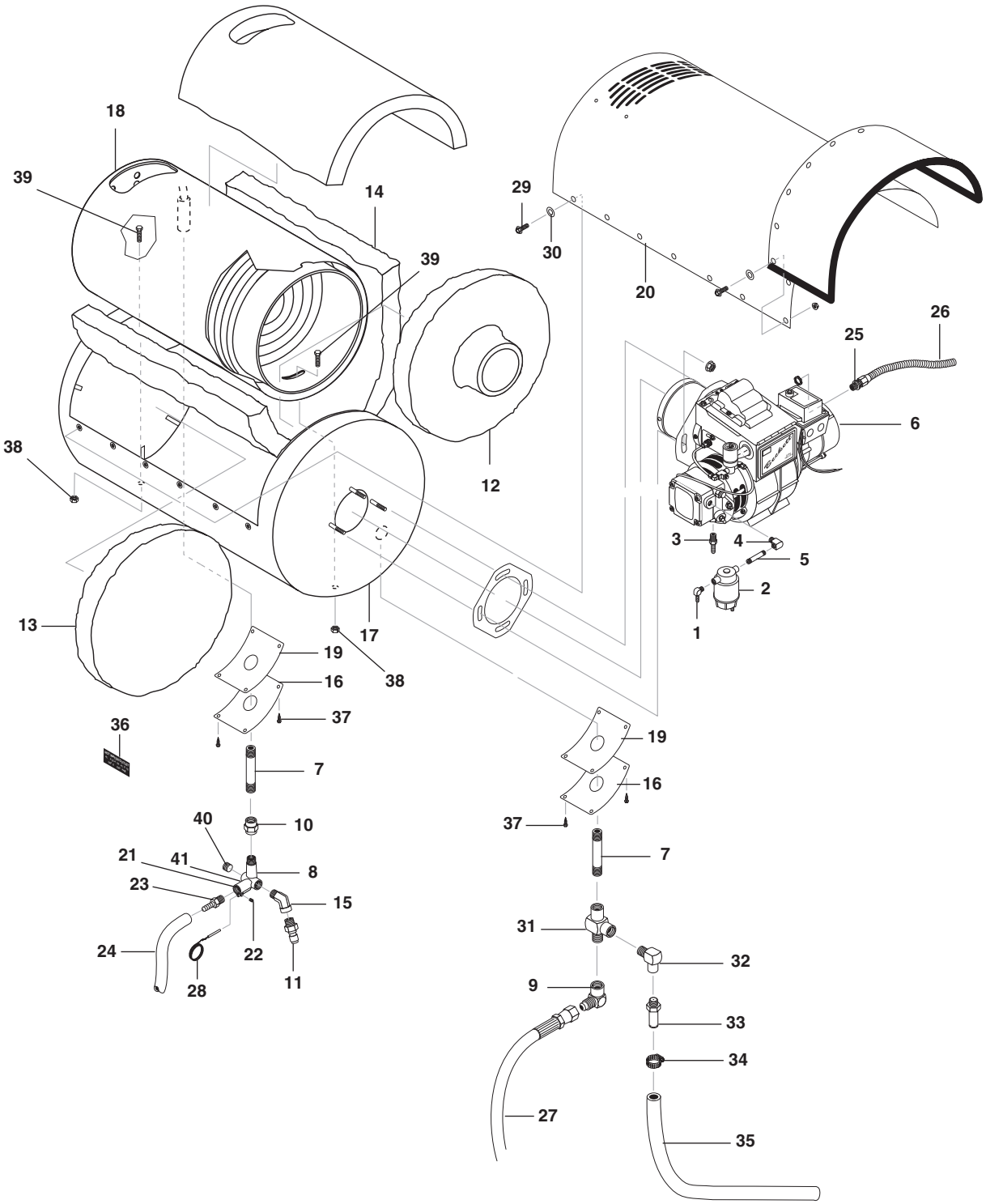

SLT COIL/BURNER ASSEMBLY PARTS LIST

ITEM	PART NO.	DESCRIPTION	QTY
1	8.706-958.0	Hose Barb, 1/4" Barb x 1/4" Pipe, 90°	1
2	8.709-158.0	Filter, Fuel/$H_2$0 Separator	1
3	8.706-941.0	Hose Barb, 1/4" Barb x 1/4" ML Pipe	1
4	8.706-827.0	Elbow, 1/4" Street	1
5	9.803-264.0	Nipple, 1/4" x 3" Black Pipe	1
6	8.717-102.0	Burner, CF800, 120V, 4.5 Nozzle, 140 PSI (8-30324E)	1
	8.717-378.0	▲ Nozzle, 3.25, 80B, (6-32324E)	1
	8.750-777.0	Burner, Oil, 115V Cap (5-30224E)	1
	8.717-366.0	▲ Nozzle, 2.50, 90° B, (5-30224E)	1
7	9.802-014.0	Nipple, 1/2" x 3", Galvanized,SCH80	2
8	9.149-003.0	Manifold Coil Outlet Discharge	1
9	9.802-043.0	Elbow, 1/2" JIC x 1/2" Female,90°	1
10	8.706-141.0	Coupling, 1/2" Hex Pipe	1
11	9.802-171.0	Nipple, 3/8" x 3/8" NPT ST Male	1
12	8.717-474.0	Insulation, Tank Head 24" w/Hole	1
13	8.717-475.0	Insulation, Tank Head 24"	1
14	8.717-476.0	Insulation, 1 Cut Blanket	1
15	9.802-041.0	Elbow, 3/8" Street 45°	1
16	8.912-220.0	Insulation Retainer Plate	2
17	8.912-449.0	Wrap, Bottom, 24"	1
18	8.912-736.0	Assembly, Coil SLT Skid	1
19	8.933-009.0	Gasket, Burner Plate	2
20	8.912-467.0	Top Wrap	1
21	9.184-030.0	Spacer, Rupture disk	1
22	9.196-012.0	Screw, 10-24 x 1/4"	1
23	8.707-019.0	Hose Barb, 1/2" x 3/8" MPT Push-On	1
24	9.802-259.0	Hose, 1/2" Push-On	1.66 ft.
25	8.716-547.0	Connector, 1/2" Straight	2
26	9.802-448.0	Conduit, Tight Flex	18"
27	8.918-210.0	Hose, 3/8" x 16" 2 Wire, Pressure Loop	1
28	8.750-095.0	Thermostat, 120C/240F	1
29	9.803-541.0	Screw, 5/16"-18 x 1/2" CS SOC,BN, NC, ZN	10
30	8.718-980.0	Washer, 5/16" Flat	10
31	8.706-236.0	Tee, 1/2" Street	1
32	8.706-171.0	Elbow, 1/2" Pipe x 3/8"	1
33	8.707-376.0	Valve, Safety Relief, 5000 PSI	1
34	9.803-559.0	Clamp, Screw	1
35	9.802-261.0	Hose, 3/4" Push-On	4 ft.
36	9.800-021.0	Label, Hot Water Outlet	1
37	9.802-797.0	Screw, SS #10 x 1/2" Hex	8
38	9.802-781.0	Nut, 3/8" NC	2
39	9.802-768.0	Screw, 3/8 x 11/4	2
40	8.706-248.0	Plug, 3/8" Allen Counter Sunk	1
41	8.725-944.0	Disk, Rupture 8000#	1

▲ Not Shown

EXPLODED VIEW - SLT

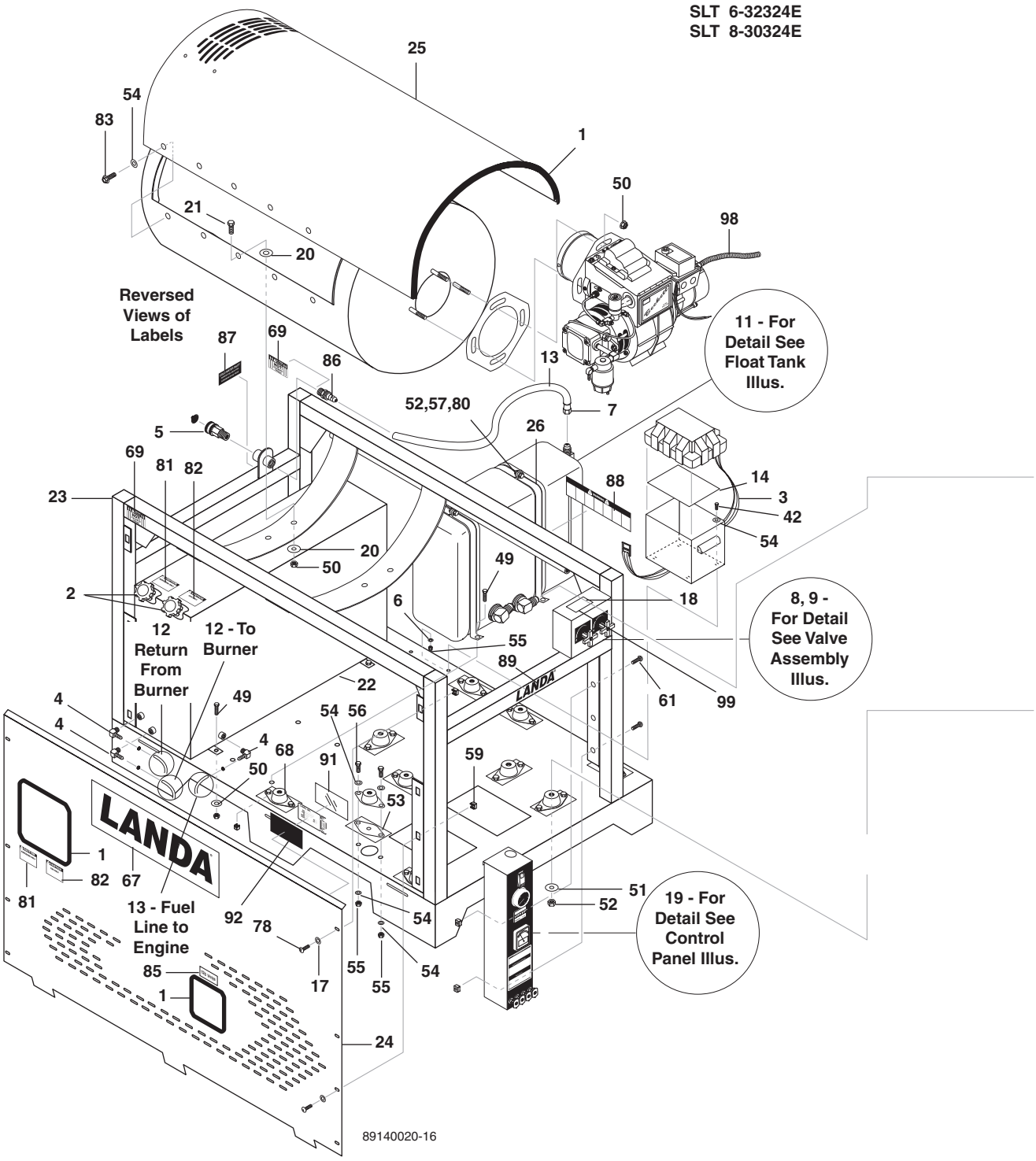

EXPLODED VIEW - SLT

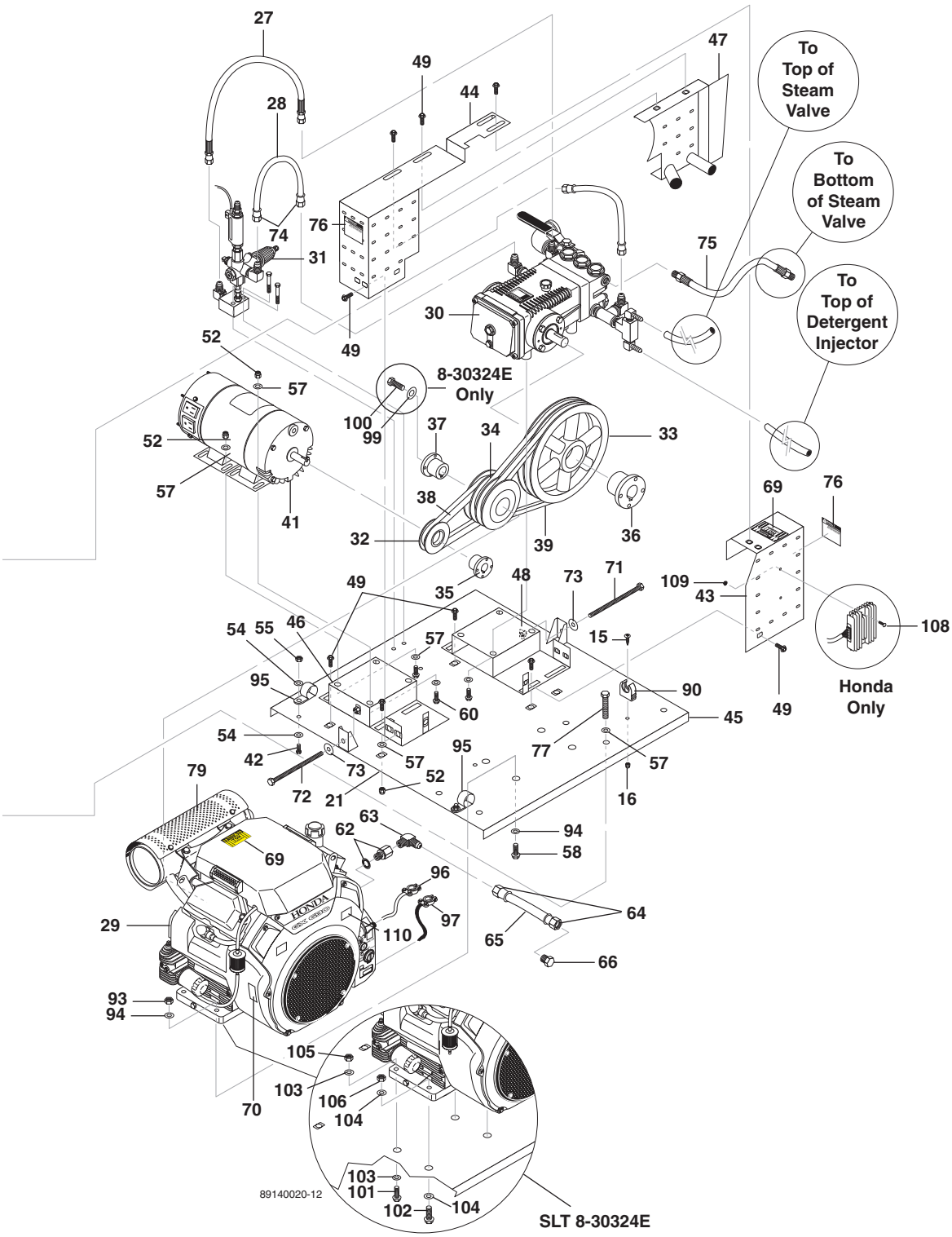

SLT EXPLODED VIEW PARTS LIST

ITEM	PART NO.	DESCRIPTION	QTY
1	9.802-071.0	Trim, 750 B2 X 1/16", Black	9.5 ft.
2	8.706-637.0	Cap, 18" w/Fuel Gauge	2
3	8.706-652.0	Battery Box, Small	1
4	8.706-955.0	Hose Barb, 1/4" Barb x 1/8" ML Pipe, 90°	3
5	9.802-146.0	Swivel, 1/2" MP x 3/4" GHF w/Strainer	1
6	9.802-813.0	Washer, 5/16" Lock, Split	4
7	9.802-152.0	Swivel, 3/4" SAE Female, Push-On	1
8	8.902-427.0	Valve Assy, Detergent, Skid	1
9	8.902-430.0	Valve Assy, Steam	1
10	6.390-126.0	▲ Clamp, Hose	8
11	8.903-580.0	Float Tank Assy, SLT Skid (8-30324E)	1
	8.903-592.0	Float Tank Assy, SLT Skid (5-30224E, 6-32324E)	1
12	4-02100000	Hose, 1/4" x 92" Push-On, Fuel Line	2
13	4-02100000	Hose, 1/4" x 72" Push-On, Fuel Line	1
14	9.802-091.0	Plate, Battery Box, Small	1
15	9.802-764.0	Screw, 10/32" x 3/4", Hex	1
16	9.802-695.0	Nut, 10/32" Keps	1
17	8.718-978.0	Washer, 1/4" Split Ring Lock	8
18	9.800-049.0	Label, Manufacturer's Cleaning Solution	1
19	—	Assy, Control Box, SLT/SLX	1
20	9.802-811.0	Washer, 3/8" x 1-1/2" Fender	8
21	9.802-768.0	Screw, 3/8" x 1-1/4" Whiz	4
22	8.912-440.0	Assy, Fuel Tank, Mild Steel	1
23	8.912-452.0	Assy, Gas Frame	1
24	8.912-453.0	Panel, Cover, 16 Gauge, MS	1
25	8.912-467.0	Wrap, Top, 16 Gauge SS, #4 Brushed, SLT	1
26	8.912-472.0	Strap, Float Tank, 14 Gauge, MS, SLT/SLX	4
27	8.918-225.0	Hose, 1/2" x 28", 2 Wire, Pressure Loop	1
28	9.802-259.0	Hose, 1/2" Push-On (5-30224E, 6-32324E)	18"
	9.802-261.0	Hose, 3/4" Push-On (8-30324E)	24"
29	Engine, See Specification Pages		
30	8.905-022.0	Pump Assy. (8-30324E)	1
	8.905-010.0	Pump Assy. (5-30224E, 6-32324E	1
31	8.905-422.0	Unloader Assy. (5-30224E, 6-32324E)	1
	8.905-433.0	Unloader Assy. (8-30324E)	1
32	Generator Pulley, See Specification Pages		
33	Pump Pulley, See Specification Pages		
34	Engine Pulley, See Specification Pages		
35	Generator Bushing, See Specification Pages		
36	Pump Bushing, See Specification Pages		
37	Engine Bushing, See Specification Pages		
38	Generator Belt, See Specification Pages		
39	Belts, See Specification Pages		
40	8.716-011.0	▲ Conduit, Flexo	6 ft.
41	8.716-610.0	Generator, 2FSM2PC-1/A, Winco	1
42	8.718-618.0	Bolt, 5/16" x 3/4"	6
43	8.912-457.0	Assy, Belt Guard, Pump End	1
44	8.912-468.0	Assy, Gas Belt Guard, Generator	1
45	8.912-460.0	Assy, Gas Power Platform, (5-3000, 6-3200)	1
	8.915-014.0	Assy, Gas Power Platform (8-30324E)	1
46	8.912-465.0	Assy, Gas Generator Slide, Mild Steel	1
47	8.912-456.0	Belt Guard, Right, Middle	1
48	8.912-461.0	Assy, Gas Pump, Plate	1
49	9.802-767.0	Screw, 3/8" x 3/4" HH NC, Whiz	27
50	9.802-781.0	Nut, 3/8" Flange, Whiz-Loc	11
51	9.802-099.0	Washer, Snubbing	10
52	8.725-395.0	Nut, 3/8" ESNA, NC	22
53	8.912-271.0	Spacer, Vibration Isolator	10
54	8.718-980.0	Washer, 5/16" Flat, SAE	69
55	9.802-776.0	Nut, 5/16" ESNA, NC	26
56	9.802-710.0	Bolt, 5/16" x 1", NC HH	20
57	8.725-394.0	Washer, 3/8" SAE, Flat	28
58	9.802-728.0	Bolt, 3/8" x 2", NC HH (6-32324E)	4
	9.802-716.0	Bolt, 5/16" x 2", NC, HH (5-30224E)	4
59	9.802-794.0	Nut, Cage, 1/4" x 12 Gauge	8
60	9.802-720.0	Bolt, 3/8" x 1" NC, HH	4
61	9.802-754.0	Screw, 1/4" x 1/2", HH NC, Whiz Loc	4
62	8.750-737.0	Adapter, Honda, M20-1.50 x 3/8" FPT	1
63	9.802-039.0	Elbow, 1/2" JIC, 3/8", 90	1

SLT EXPLODED VIEW PARTS LIST

ITEM	PART NO.	DESCRIPTION	QTY
64	9.802-151.0	Swivel, 1/2" JIC Fem, Push-On	2
65	9.802-259.0	Hose, 1/2" Push-On	9"
66	9.802-126.0	Plug, 1/2" JIC, Flare	1
67	8.900-802.0	Label, Landa Stripe	1
68	9.802-057.0	Isolator, Vibration Mount, 100 Lb.	10
69	9.800-006.0	Label, “Hot/Caliente”	4
70	8.900-282.0	Label, RPM Factory Set	1
71	9.803-845.0	Bolt, 1/2" x 5", NC HH Tap	1
72	9.802-740.0	Bolt, 1/2" x 3-1/2", NC	1
73	9.802-800.0	Washer, 1/2" Flat	2
74	9.802-151.0	Swivel, 1/2" JIC Fem., Push-On (5-30224E, 6-32324E)	2
	9.802-152.0	Swivel, 3/4" Push-On, Female (8-30324E)	2
75	8.918-183.0	Hose, 1/4" x 28", 2 Wire, Pressure Loop	1
76	8.932-965.0	Label, Warning-Exposed Pulleys	2
77	9.802-730.0	Bolt, 3/8" x 2-1/2" GR5 Zinc	10
78	9.804-003.0	Screw, 1/4" x 3/4" BH SOC CS	8
79	8.750-498.0	Muffler, Honda, GX630/GX660, Left (6-32324E, 8-30324E)	1
	8.739-597.0	Bolt, Flange, M8 x 20 (6-32324E, 8-30324 E)	2
	9.803-631.0	Muffler, Briggs Exhaust (5-30224E)	1
	9.802-867.0	Guard, Muffler, 16 HP Vanguard (5-30224E)	1
	9.802-868.0	Brace, Bracket, Vanguard Muffler (5-30224E)	2
	9.803-011.0	Shield, Heat, 16 HP Vanguard (5-30224E)	1
	9.802-754.0	Screw, 1/2" x 1/4" HH, NC, Whiz (5-30224E)	5
	9.802-775.0	Nut, 1/4" Flange (5-30224E)	3
	9.802-794.0	Nut, 1/4" x 12 Gauge Cage (5-30224E)	2
	9.802-830.0	Screw, 1/4"-20 x 1/2" Hex (5-30224E)	4
80	9.802-727.0	Bolt, 3/8" x 1-3/4" Tap	2
81	9.800-002.0	Label, Use Only Kerosene	2
82	9.800-001.0	Label, This Tank For Gas Only	2
83	9.803-541.0	Screw, 5/16"-18 x1/2" CS SOC,BN, NC, ZN	10
84	9.802-261.0	Hose, 3/4" Push-On	20"
85	9.800-022.0	Label, 120V	1
86	8.707-020.0	Barb, 1/2" MPT x 3/4" Barb	1

ITEM	PART NO.	DESCRIPTION	QTY
87	9.800-020.0	Label, Cold Water Inlet	1
88	9.800-036.0	Label, Warning Pictorial, Small	1
89	8.900-300.0	Label, Landa	1
90	9.802-203.0	Clamp, 1/2" RO-Clip	1
91	9.800-034.0	Label, Clear Lexan, 2-1/4" x 4-1/2"	1
92	8.932-968.0	Label, Intended for Outdoor Use	1
93	9.802-776.0	Nut, 5/16" ESNA, NC (5-30224E)	4
	8.725-395.0	Nut, 3/8" ESNA, NC (6-32324E)	4
94	8.718-980.0	Washer, 5/16" Flat, SAE (5-30224E)	8
	8.725-394.0	Washer, 3/8" Flat, SAE (6-32324E)	8
95	9.802-206.0	Clamp, Hose	2
96	9.803-836.0	Wire, Red, 6 Gauge	4 ft.
97	9.803-837.0	Wire, Black, 6 Gauge	4 ft.
98	9.802-448.0	Conduit, WTR. Tight, Flex 1/2 100'/BOX	1.9 Ft.
99	8.718-988.0	Washer 7/16, USS, Flat	1
100	8.731-276.0	Tap Bolt, 7/16 - 20 x 1-1/2	1
101	9.802-728.0	Threaded Bolt 3/8" x 2" (8-30324E)	2
102	8.725-320.0	7/16 - 14 x 2 Hex Tap Bolt ZC (8-30324E)	2
103	9.802-807.0	Washer 3/8" SAE Flat (8-30324E)	4
104	9.802-809.0	1/2" SAE Flat Washer ZC (8-30324E)	4
105	9.802-779.0	Nut, 3/8" ESNA, NC (8-30324E)	2
106	8.725-319.0	Nut, 7/16 - 14 Nyl ZC (8-30324E)	2
107	8.800-049.0	Label, Manufacturer's Cleaning Solutions	1
108	9.802-764.0	Screw, 10/32 x 3/4"	2
109	9.802-695.0	Nut, 10/32 Keps	2
110	9.801-252.0	Label, Maintain Engine Spd	1

EXPLODED VIEW - SLX

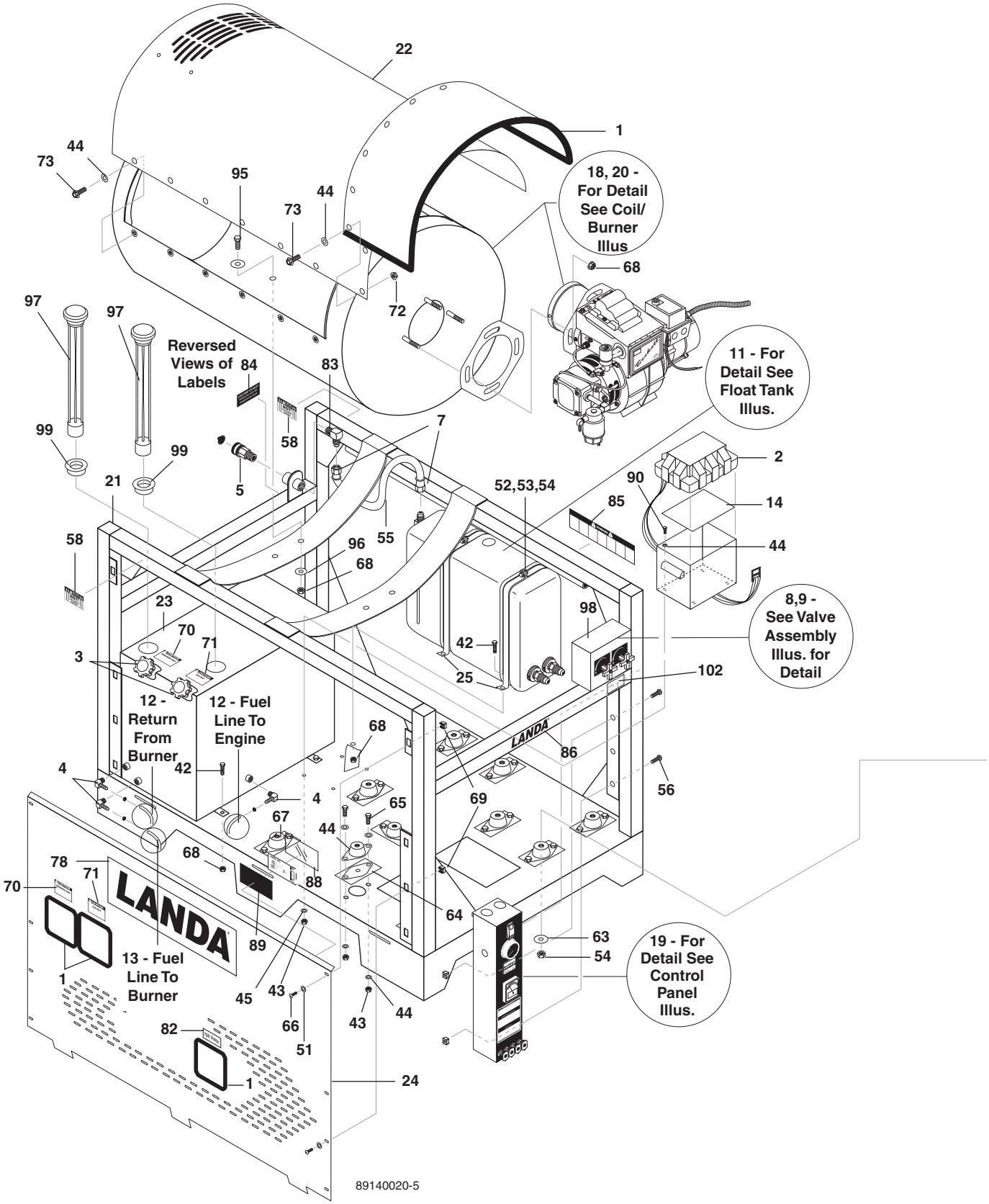

EXPLODED VIEW - SLX

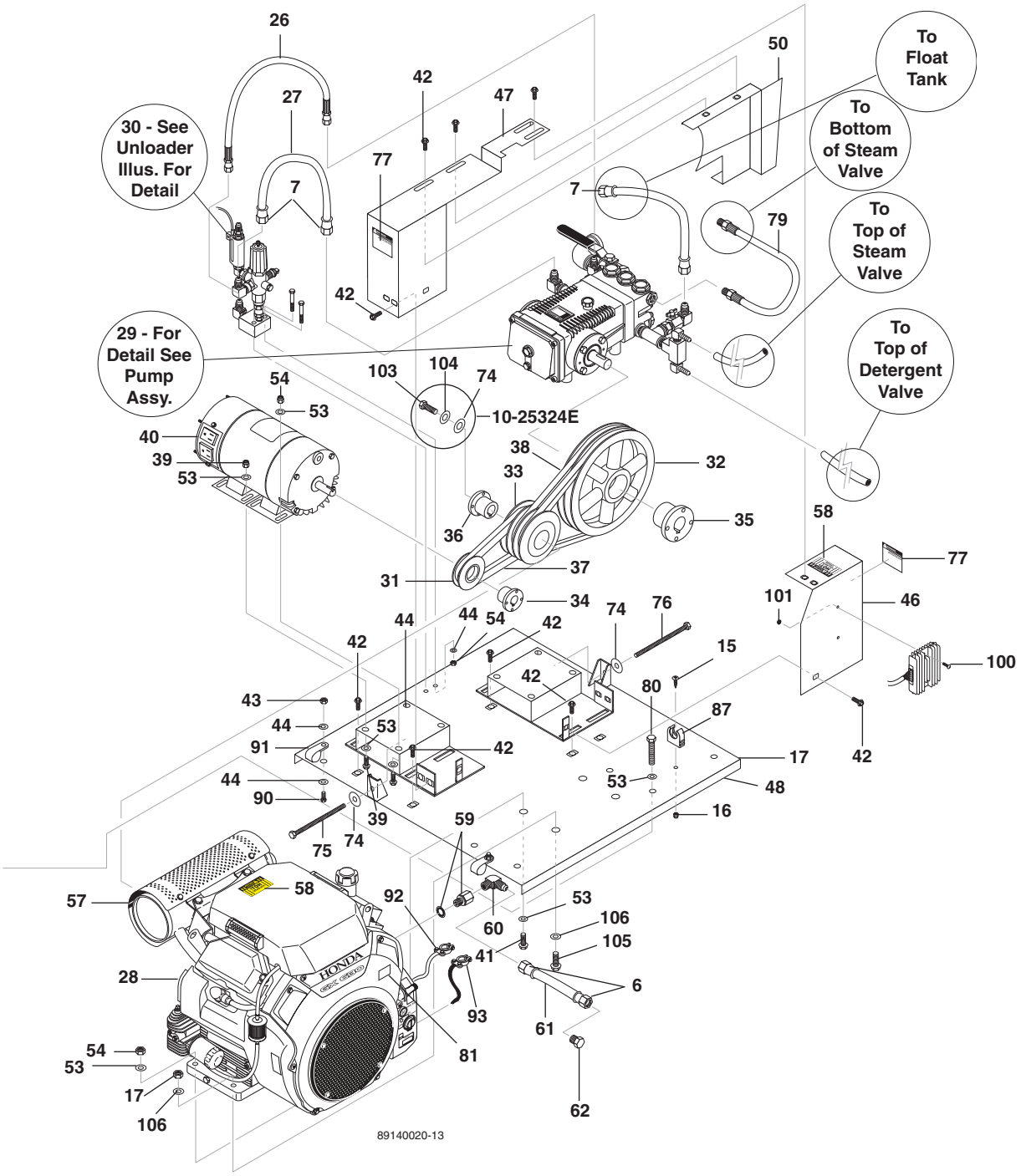

SLX EXPLODED VIEW - PARTS LIST

ITEM	PART NO.	DESCRIPTION	QTY
1	9.802-071.0	Trim, 750 B2 x 1/16", Black	11.25 ft.
2	8.706-600.0	Battery Box, Large	1
3	8.802-082.0	Cap, Fuel	2
4	8.706-955.0	Hose Barb, 1/4" Barb x 1/8" ML Pipe, 90°	3
5	9.802-146.0	Swivel, 1/2" MP x 3/4" GHF w/Strainer	1
6	9.802-151.0	Swivel, 1/2" JIC Female, Push-On	2
7	9.802-152.0	Swivel, 3/4" SAE Female, Push-On	4
8	8.902-427.0	Valve Assy, Detergent, Skid	1
9	8.902-430.0	Valve Assy, Steam	1
10	6.390-126.0	▲ Clamp, Hose	8
11	8.903-591.0	Float Tank Assy, SLT Skid	1
12	9.802-254.0	Hose, 1/4" x 92", Fuel Line	2
13	9.802-254.0	Hose, 1/4" x 72" Fuel Line	1
14	9.802-076.0	Plate, Battery Box, Large	1
15	9.802-764.0	Screw, 10/32" x 3/4" Hex	1
16	9.802-695.0	Nut, 10/32" Keps	1
17	8.725-319.0	Nut, 7/16 Nyloc (10-25324E)	2
18	—	Coil Assy, SLT	1
19	—	Assy, Control Box, SLT/SLX	1
20	—	Burner Assy, SLT (8-10GPM)	1
21	8.911-233.0	Assy, Frame, Mild Steel	1
22	8.911-236.0	Wrap, Top, 16 Gauge 340SS, #4 Brush	1
23	8.911-241.0	Assy, Fuel Tank	1
24	8.912-451.0	Panel, Gas Cover, 16 Gauge, MS, SLT	1
25	8.912-472.0	Strap, Float Tank, 14 Gauge, MS, SLT/SLX	4
26	8.918-225.0	Hose, 1/2 x 28", 2 Wire, Pressure Loop	1
27	9.802-261.0	Hose, 3/4" Push-On	18"
28	Engine, See Specification Pages		
29	8.905-026.0	Pump Assy, SLT10-2	1
30	8.905-433.0	Unloader, Assembly, SLX	1
31	Generator Pulley, See Specification Pages		
32	Pump Pulley, See Specification Pages		
33	Engine Pulley, See Specification Pages		
34	Generator Bushing, See Specification Pages		
35	Pump Bushing, See Specification Pages		
36	Engine Bushing, See Specification Pages		
37	Generator Belt, See Specification Pages		
38	Belts, See Specification Pages		

ITEM	PART NO.	DESCRIPTION	QTY
39	9.802-720.0	Bolt, 3/8" x 1" NC HH	4
40	8.716-610.0	Generator, 2FSM2PC-1/A, Winco	4
41	9.802-728.0	Bolt, 3/8" x 2", NC, HH (10-25324E)	2
42	9.802-767.0	Screw, 3/8" x 3/4", HH, NC, Whiz	27
43	9.802-776.0	Nut, 5/16" ESNA, NC	26
44	8.718-980.0	Washer, 5/16" Flat, SAE	69
45	9.802-813.0	Washer, 5/16" Lock, Split	4
46	8.912-457.0	Assy, Belt Guard, Pump	1
47	8.912-468.0	Assy, Gas Belt Guard, Mild Steel, Left	1
48	8.915-014.0	Assy, Gas Power Platform (10-25324E)	1
49	8.912-465.0	Assy, Gas Generator Slide, Mild Steel	1
50	8.912-456.0	Belt Guard, Middle	1
51	8.718-978.0	Washer, 1/4" Split Ring Lock	8
52	9.802-727.0	Bolt, 3/8" x 1-3/4" Tap	2
53	8.725-394.0	Washer, 3/8" SAE, Flat	32
54	8.725-395.0	Nut, 3/8" ESNA, NC	24
55	9.802-261.0	Hose, 3/4" Push-On	10"
56	9.802-754.0	Screw, 1/4" x 1/2" HH NC, Whiz Loc	4
57	8.750-498.0	Muffler, Honda, GX630/GX660, Left	1
	8.739-597.0	▲ Bolt, Flange, M8 x 20	2
58	9.800-006.0	Label, "Hot/Caliente"	4
59	8.750-737.0	Adapter, Honda, M20-1.5 x 3/8" FPT	1
60	9.802-039.0	Elbow, 1/2" JIC, 3/8", 90°	1
61	9.802-259.0	Hose, 1/2" Push-On	9"
62	9.802-126.0	Plug, 1/2" JIC, Flare	1
63	9.802-099.0	Washer, Snubbing	10
64	8.912-271.0	Spacer, Vibration Mount	10
65	9.802-710.0	Bolt, 5/16" x 1", NC HH	20
66	9.804-003.0	Screw, 1/4" x 3/4" BH SOC CS	8
67	9.802-057.0	Isolator, Vibration Mount	10
68	9.802-781.0	Nut, 3/8" Flange, Whiz Loc, NC	11
69	9.802-794.0	Nut Cage, 1/4" x 12 Gauge	8
70	9.800-002.0	Label, Use Kerosene Only	2

SLX EXPLODED VIEW - PARTS LIST

ITEM	PART NO.	DESCRIPTION	QTY
71	9.800-001.0	Label, This Tank For Gas Only	2
72	9.802-778.0	Nut, 5/16" Flange, Whiz Loc	9
73	9.803-541.0	Screw, 5/16"-18 x1/2", CS SOC BH NC ZN	21
74	9.802-800.0	Washer, 1/2" Flat	3
75	9.802-740.0	Bolt, 1/2" x 3-1/2" NC	1
76	9.803-845.0	Bolt, 1/2" x 5" NC HH Tap	1
77	8.932-965.0	Label, Warning -Exposed Pulleys	2
78	8.900-802.0	Label, Landa Stripe	1
79	8.918-182.0	Hose, 1/4" x 26", 2-Wire, Pressure Loop	1
80	9.802-730.0	Bolt, 3/8" x 2-1/2" GR 5 Zinc	10
81	9.801-252.0	Label, Maintain Engine Speed	1
82	9.800-022.0	Label, 120V	1
83	9.802-132.0	Elbow, 3/4" JIC x 1/2", 90°	1
84	9.800-020.0	Label, Cold Water Inlet	1
85	9.800-035.0	Label, Warning Pictorial	1
86	8.900-300.0	Label, Landa	1
87	9.802-203.0	Clamp, 1/2" RO-Clip	1
88	9.800-034.0	Label, Clear Lexan, 2-1/4" x 4-1/2"	1
89	8.932-968.0	Label, Intended for Outdoor Use	1
90	8.718-618.0	Bolt, 5/16" x 3/4" NC GRCS	6
91	9.802-206.0	Clamp, Hose	2
92	9.803-836.0	Wire, 6 Gauge, Red	5 ft.
93	9.803-837.0	Wire, 6 Gauge, Black	5 ft.
94	9.803-838.0	Connector, Battery Post	2
95	9.802-768.0	Screw, 3/8" x 1-1/4" Whiz	4
96	9.802-811.0	Washer, 3/8" x 1-1/2" Fender	8
97	8.750-574.0	Gauge, Fuel Level	2
98	9.800-049.0	Label, Manufacturer's Cleaning Solutions	1
99	9.803-604.0	Sleeve, Fuel Gauge	2
100	9.802-764.0	Screw, 10/32 x 3/4	2
101	9.802-695.0	Nut, 10/32 Keps	2
102	9.800-049.0	Label, Manufacturer's Cleaning Solutions	1
103	8.731-276.0	Tap Bolt, 7/16 - 20 x 1-1/2 (10-25324E)	1
104	8.718-988.0	Washer, 7/16 USS, Flat (10-25324E)	1
105	8.725-320.0	Bolt, 7/16 x 2" (10-25324E)	2
106	9.802-809.0	Washer 1/2 Flat (10-25324E)	4

EXPLODED VIEW - COIL/BURNER ASSEMBLY - SLX

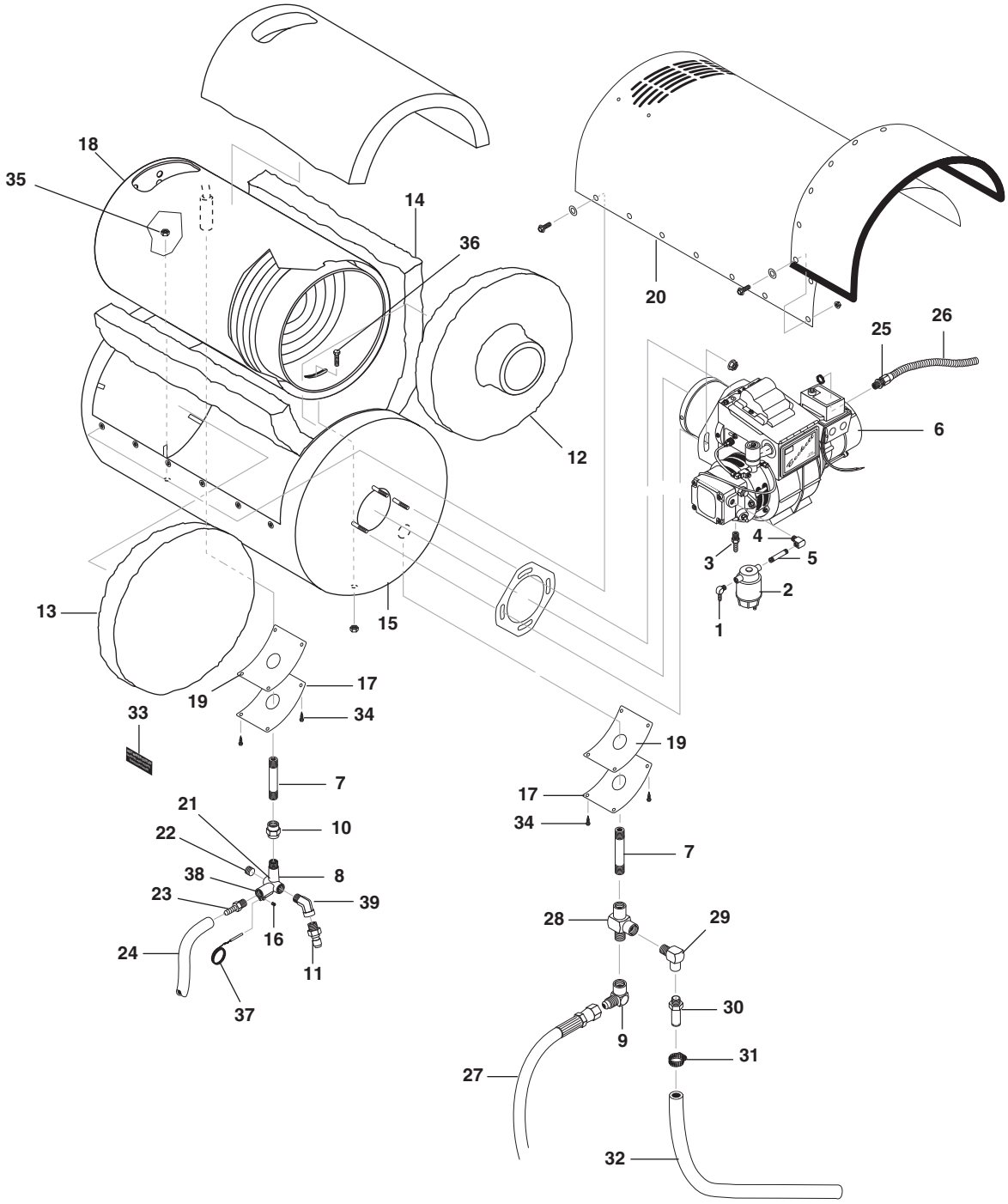

SLX COIL/BURNER ASSEMBLY PARTS LIST

ITEM	PART NO.	DESCRIPTION	QTY
1	8.706-958.0	Hose Barb, 1/4" Barb x 1/4" Pipe, 90°	1
2	8.709-158.0	Filter, Fuel/$H_2$0 Separator	1
3	8.706-941.0	Hose Barb, 1/4" Barb x 1/4" ML Pipe	1
4	8.706-827.0	Elbow, 1/4" Street	1
5	9.803-264.0	Nipple, 1/4" x 3", Black Pipe	1
6	8.717-102.0	Burner, CF800, 120V, 4.5 Nozzle, 160 PSI	1
7	9.802-014.0	Nipple, 1/2" x 3", Galvanized, SCH80	2
8	9.149-003.0	Manifold Coil Outlet Discharge	1
9	9.802-043.0	Elbow, 1/2" JIC x 1/2" Female, 90°	1
10	8.706-141.0	Coupling, 1/2" Hex Pipe	1
11	9.802-171.0	Nipple, 3/8" x 3/8" NPT ST Male	1
12	8.717-477.0	Insulation, Tank Head 30" w/Hole	1
13	8.717-478.0	Insulation, Tank Head 30"	1
14	8.717-479.0	Insulation, 1 Cut Blanket	1
15	8.911-234.0	Wrap, Bottom Assy.	1
16	9.196-012.0	Screw, 10-24 x 1/4"	1
17	8.912-220.0	OF/VOF Insulation Retainer Plate	2
18	8.912-250.0	Coil, SLX Large SCH 80	1
19	8.933-009.0	Gasket, Burner Plate	2
20	8.911-236.0	Top Wrap, 16 Ga, 304 S.S., #4 Brush	1
21	8.725-944.0	Disk, Rupture 8000#	1
22	8.706-248.0	Plug, 3/8" Allen Counter Sunk	1
23	8.707-019.0	Hose Barb, 1/2" x 3/8" MPT Push-On	1
24	9.802-259.0	Hose, 1/2" Push-On	1.66 ft.
25	8.716-547.0	Connector, 1/2" L/T Straight	2
26	9.802-448.0	Conduit, Flexo, 1/2" Black	2 ft.
27	8.918-225.0	Hose, 1/2" x 28", 2 Wire	1
28	8.706-236.0	Tee, 1/2" Street	1
29	8.706-171.0	Elbow, 1/2" Pipe x 3/8"	1
30	8.707-376.0	Valve, Safety Relief, 4500 PSI	1
31	9.803-559.0	Clamp, Screw	1
32	9.802-261.0	Hose, 3/4" Push-On	4 ft.
33	9.800-021.0	Label, Hot Water Outlet	1
34	9.802-797.0	Screw, #10 x 1/2" Hex Head,Tek	8
35	9.802-781.0	Nut, 3/8" NC	2
36	9.802-768.0	Screw, 3/8" x 11/4"	1
37	8.750-095.0	Thermostat,120C/240F	1
38	9.184-030.0	Spacer, Rupture Disc	1
39	9.802-041.0	Elbow, 3/8" Street 45°	1

EXPLODED VIEW - 5, 6, 8 GPM PUMP/UNLOADER ASSEMBLIES

SLT 5,6 GPM

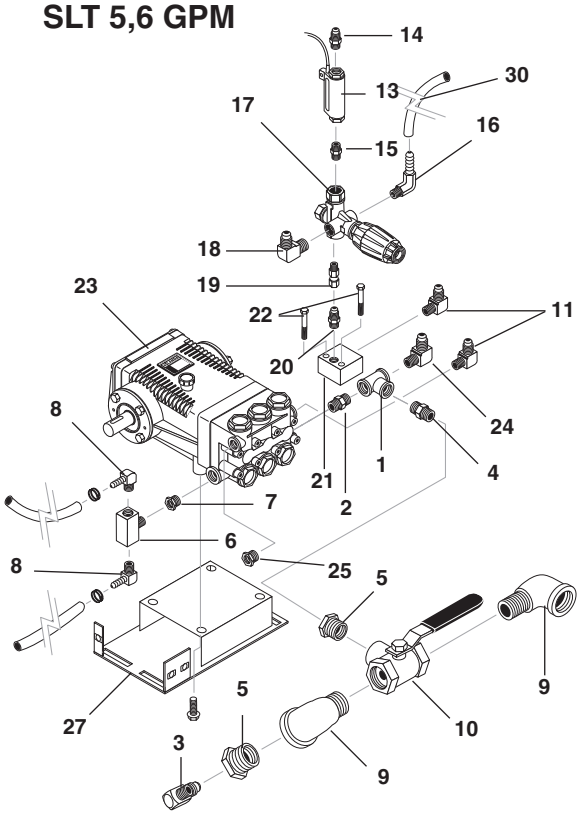

SLT 8 GPM

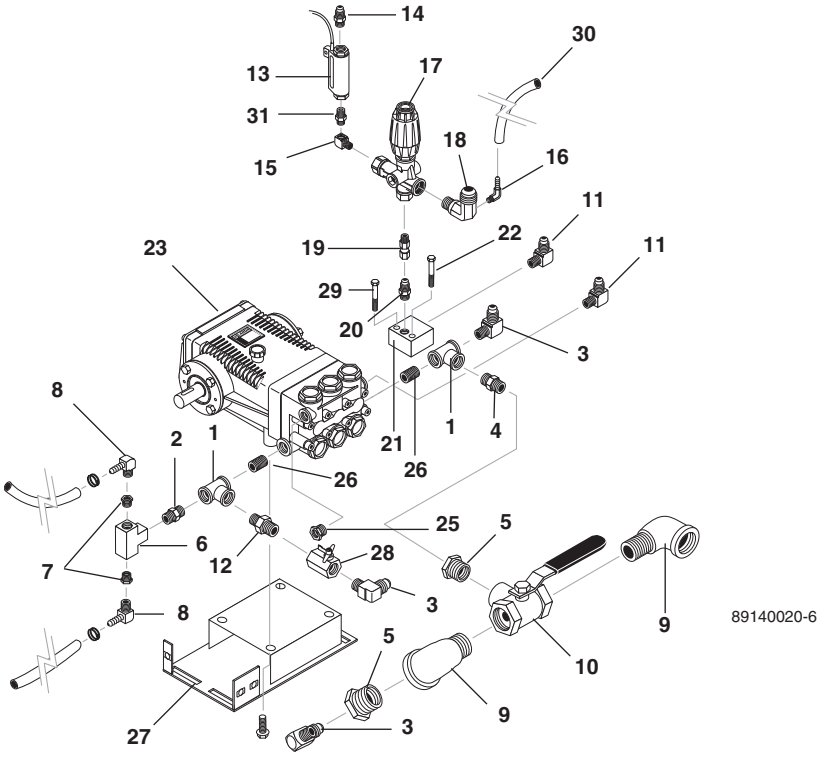

5, 6, 8 GPM PUMP/UNLOADER ASSEMBLY PARTS LIST

ITEM	PART NO.	DESCRIPTION	QTY
1	8.706-846.0	Tee, 3/4" Female Pipe, Brass (5,6 GPM)	1
		(8 GPM)	2
2	8.706-881.0	Nipple, 3/4" Pipe x 1/2" Pipe	1
3	9.803-557.0	Elbow, 3/4" SAE x 3/4", 90° (5, 6 GPM)	1
		(8 GPM)	3
4	8.706-800.0	Nipple, 3/4" Hex	1
5	8.706-929.0	Bushing, 1" x 3/4"	2
6	8.706-854.0	Tee, 1/4" Branch Male (8 GPM)	1
	8.706-844.0	Tee, 1/2" Female, Pipe (5,6 GPM)	1
7	8.706-915.0	Bushing, 1/2" x 1/4" Brass (5, 6 GPM)	1
		(8 GPM)	2
8	8.706-958.0	Hose Barb, 1/4" Barb x 1/4" Pipe, 90°	2
9	8.706-833.0	Elbow, 1" Street Brass	2
10	8.707-230.0	Valve, 1", 3-Way Brass	1
11	9.802-040.0	Elbow, 1/2" JIC, 1/2", 90° (8 GPM)	2
	9.802-039.0	Elbow, 1/2 JIC x 3/8", 90° (5,6 GPM)	2
12	8.706-800.0	Nipple, 3/4" Hex, Brass (8 GPM)	1
13	8.933-006.0	Switch, Flow MV60, Yellow	1
14	9.802-036.0	Nipple, 1/2" JIC, 3/8" Pipe	1
15	8.705-974.0	Nipple, 3/8" Hex Steel (P/N TF5405-8) (5, 6 GPM)	1
	8.706-171.0	Elbow, 1/2" MPT x 3/8" FPT 90° Street, Steel (8 GPM)	1
16	8.706-955.0	Hose Barb, 1/4" Barb x 1/8" MPT, 90°	1
17	8.750-299.0	Unloader, VRT 3, 8 GPM@ 4500 PSI	1
	8.712-708.0	Unloader, Valve (Giant 22913) 3000 PSI (8 GPM)	1

ITEM	PART NO.	DESCRIPTION	QTY
18	9.802-129.0	Elbow, 1/2" JIC x 3/8", 90° (5, 6 GPM)	1
	8.752-090.0	Elbow, Tapped, 3/4" x 1/2" (8 GPM)	1
19	9.802-048.0	Swivel, 1/2" JIC Female, 3/8" Male (5, 6 GPM)	1
	8.706-315.0	Swivel, 1/2" JIC, 1/2" Male (8 GPM)	1
20	9.802-038.0	Nipple, 1/2" JIC, 1/2" Pipe (8 GPM)	1
	9.802-036.0	Nipple, 1/2" JIC x 3/8" Pipe (5, 6 GPM)	1
21	9.802-870.0	Block, Unloader, 3/8" x 3/8" 1.25 Steel (5,6 GPM)	1
	9.802-869.0	Block, Unloader, 1/2" x 1/2" 1.75" Steel	1
22	9.802-728.0	Bolt, 3/8" x 2", NC HH (5,6 GPM)	2
	9.802-730.0	Bolt, 3/8" x 2 1/2", GR5 Zinc (8 GPM)	1
23	8.904-883.0	Pump, Landa LT6035/L6 @ 3500, 1540 RPM (5,6 GPM)	1
	8.904-889.0	Pump, Landa LX8030/L, 8@3000, 1460 RPM (8 GPM)	1
24	8.706-890.0	Elbow, 1/2" JIC x 3/4" Pipe, 90° (5, 6 GPM)	1
25	8.706-282.0	Bushing, 1/2" x 1/4" (8 GPM)	1
	8.706-297.0	Bushing, 3/8" x 1/4" (5, 6 GPM)	1
26	8.706-799.0	Nipple, 3/4" Close (8 GPM)	2
27	8.912-461.0	Pump Rail	1
28	8.707-224.0	Valve, 3/4" Ball, SMC, Brass (8 GPM)	1
29	9.802-734.0	Bolt, 3/8-16 x4 1/2 HEX G-5 ZINC (8 GPM)	1
30	9.802-254.0	Hose, 1/4" Push-on	6
31	8.705-974.0	Nipple, 3/8" Hex, Steel	1

EXPLODED VIEW - 10 GPM PUMP/UNLOADER ASSEMBLY

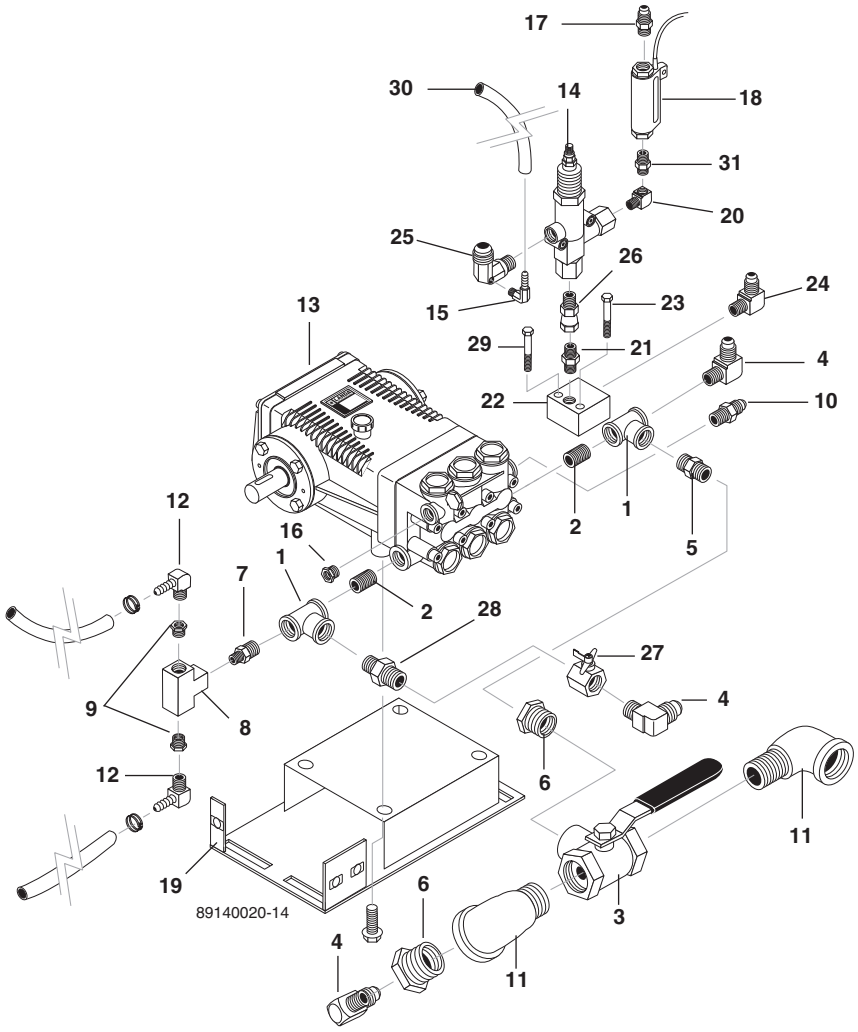

10 GPM PUMP/UNLOADER ASSEMBLY PARTS LIST

ITEM	PART NO.	DESCRIPTION	QTY
1	8.706-846.0	Tee, 3/4" Female Pipe	2
2	8.706-799.0	Nipple, 3/4" Close	2
3	8.707-230.0	Valve, 1" Brass, 3-Way	1
4	9.803-557.0	Elbow, 3/4" SAE x 3/4", 90°	3
5	8.706-800.0	Nipple, 3/4" Hex	1
6	8.706-929.0	Bushing, 1" x 3/4" Barstock	2
7	8.706-881.0	Nipple, 3/4" Pipe x 1/2" Pipe	1
8	8.706-844.0	Tee, 1/2" Female, Pipe	1
9	8.706-915.0	Bushing, 1/2" x 1/4" Brass	2
10	9.802-038.0	Nipple, 1/2" JIC, 1/2" Pipe	1
11	8.706-833.0	Elbow, 1" Street, Brass	2
12	8.706-958.0	Hose Barb, 1/4" Barb x 1/4" Pipe, 90°	2
13	8.904-891.0	Pump, Landa LX1025/L	1
14	8.712-708.0	Unloader, (Giant 22913) Valve	1
15	8.706-955.0	Hose Barb, 1/4" Barb x 1/8" MPT, 90°	1

ITEM	PART NO.	DESCRIPTION	QTY
16	8.706-282.0	Bushing, 1/2" x 1/4"	1
17	9.802-036.0	Nipple, 1/2" JIC, 3/8" Pipe	1
18	8.933-006.0	Switch, Flow MV60, Yellow	1
19	8.912-461.0	Pump Rail	1
20	8.706-171.0	Elbow, 1/2" x 3/8" 90°	1
21	9.802-038.0	Nipple, 1/2" JIC, 1/2" Pipe	1
22	9.802-869.0	Block, Unloader, 1/2" x 1/2"	1
23	9.802-730.0	Bolt, 3/8" x 2 1/2" GR5 Zinc	1
24	9.802-040.0	Elbow, 1/2" JIC, 1/2", 90°	1
25	8.752-090.0	Elbow, Tapped, 3/4" x 1/2"	1
26	8.706-315.0	Swivel, 1/2" JIC x 1/2" Male	1
27	8.707-224.0	Valve, 3/4" Ball, SMC, Brass	1
28	8.706-800.0	Nipple, 3/4" Hex, Brass	1
29	9.802-734.0	Bolt, 3/8-16 x 4 1/2	1
30	9.802-254.0	Hose, 1/4" Push-on	6
31	8.705-974.0	Nipple, 3/8" Hex Steel	1

EXPLODED VIEW - VALVE ASSEMBLY

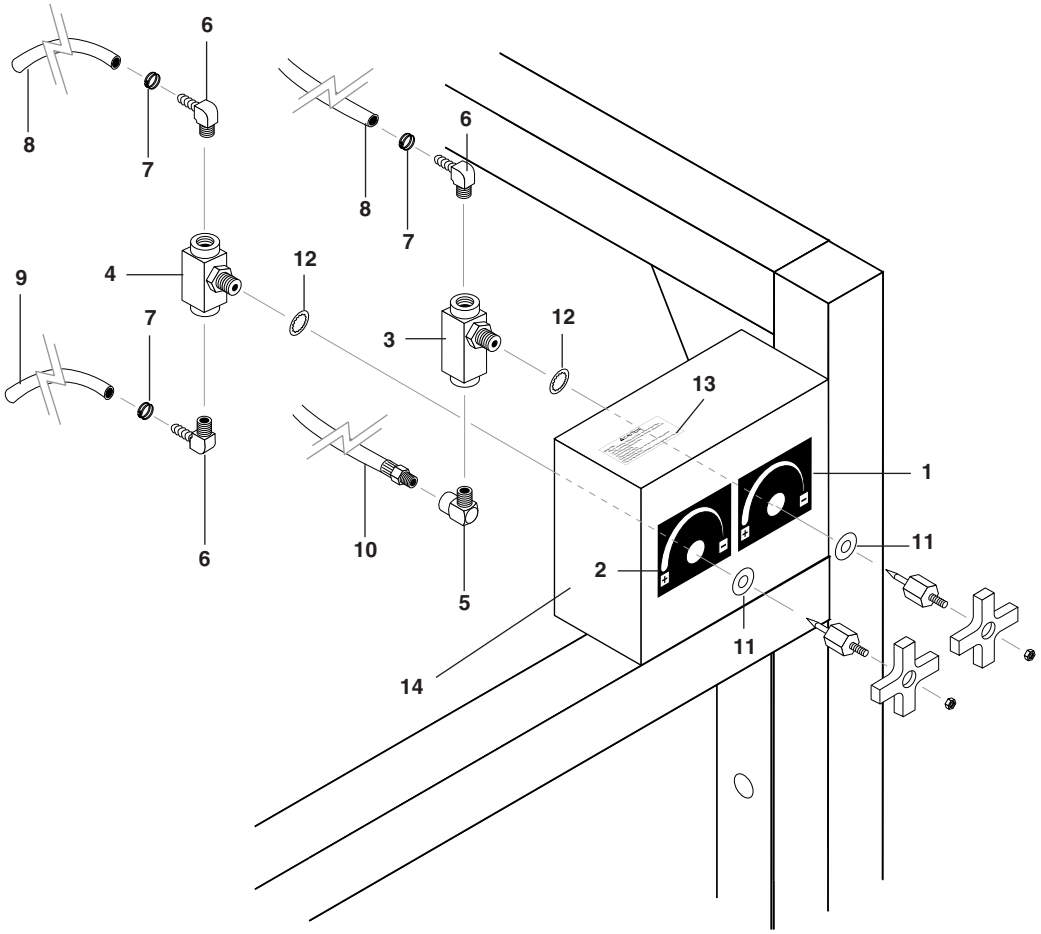

VALVE ASSEMBLY PARTS LIST

ITEM	PART NO.	DESCRIPTION	QTY
1	9.800-029.0	Label, VHP Steam Valve	1
2	8.900-825.0	Label, Detergent Control Valve	1
3	9.802-187.0	Valve, Flow Control, w/Metering	1
4	8.707-317.0	Valve, Flow Control	1
5	8.706-200.0	Elbow, 1/4" Street x 3/8", Steel	1
6	8.706-958.0	Hose Barb, 1/4" Barb x 1/4" Pipe, 90°	3
7	6.390-126.0	Clamp, Hose, .46 -, .54 ST	3
8	9.802-254.0	Hose, 1/4" x 34" Push-On (8-30324E)	2
	9.802-254.0	Hose, 1/4" x 26" Push-On (10-25324E)	2

ITEM	PART NO.	DESCRIPTION	QTY
9	9.802-251.0	Tube, Clear Vinyl	6 ft.
10	8.918-183.0	Hose, 1/4" x 28" Pressure Loop (5-30224E, 6-32324E, 8-30324E)	1
	8.918-182.0	Hose, 1/4" x 26" Pressure Loop (10-25324E,)	1
11	9.802-810.0	Washer, 5/8" Flat	2
12	8.719-011.0	Washer, 5/8" Star	2
13	9.800-049.0	Label, Manuf. Cleaning Sol.	1
14	8.911-724.0	Box, Valve (SLX 10-25324E Only)	1
	9.802-759.0	▲ Screw, 10-32" X 1/2"	3
	9.802-695.0	▲ Nuts, Keps10-32"	3

▲ Not Shown

EXPLODED VIEW - CONTROL PANEL

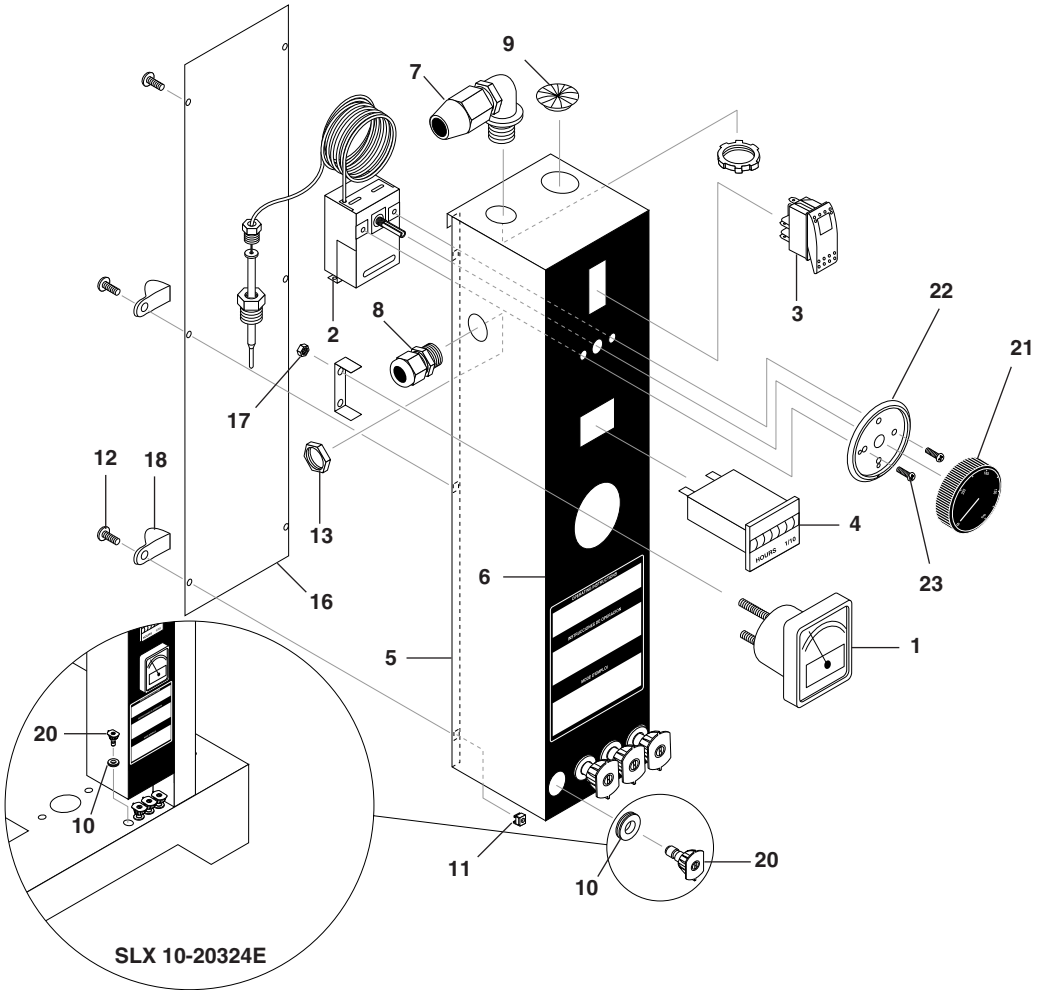

CONTROL PANEL PARTS LIST

ITEM	PART NO.	DESCRIPTION	QTY
1	8.712-159.0	Voltmeter, 120VAC	1
2	8.750-095.0	Thermostat, 240°	1
3	9.802-451.0	Burner Switch	1
4	9.802-283.0	Hour Meter	1
5	8.912-454.0	Box, Electric, 16 Gauge MS, SLT	1
6	8.900-307.0	Label, Electric Box	1
7	9.802-517.0	Connector, 1/2" L/T, 90°	1
8	9.802-515.0	Strain Relief, Strt, LQ Tite	1
9	8.706-755.0	Bushing, .875" P/N 2119	1
10	9.802-064.0	Grommet, Rubber Nozzle	1
11	9.802-793.0	Cage, Nut, 1/4"	10
12	9.802-765.0	Screw, Allen Head, Black	6
13	9.802-525.0	Locknut, 1/2"	1

ITEM	PART NO.	DESCRIPTION	QTY
14	9.800-040.0	▲ Label, Ground	1
	9.802-762.0	▲ Screw, 10/32" x 11/4 R H SL, Black	1
	9.802-695.0	▲ Nut, 10/32" Keps	1
15	9.802-447.0	▲ Conduit, 1/4" Corrugated Tubing	5.5 ft.
16	8.912-455.0	Cover, E-Box, 16 Gauge	1
17	8.718-852.0	Nut, 6/32" Hex	2
18	9.802-204.0	Clamp, Hose	2
19	9.802-435.0	▲ Cord, Molded, Royal	1
20	8.712-361.0	Nozzle, SAQCMEG, 0006, Red (SLT 5-30224E)	1
	8.712-362.0	Nozzle, SAQCMEG, 1506, Yellow (SLT 5-30224E)	1
	8.712-363.0	Nozzle, SAQCMEG, 2506, Green (SLT 5-30224E)	1
	8.712-364.0	Nozzle, SAQCMEG, 4006, White (SLT 5-30224E)	1

CONTROL PANEL PARTS LIST

ITEM	PART NO.	DESCRIPTION	QTY
20	8.712-365.0	Nozzle, SAQCMEG, 0006.5, Red (SLT 6-32324E)	1
	8.712-366.0	Nozzle, SAQCMEG, 1506.5, Yellow (SLT 6-32324E)	1
	8.712-367.0	Nozzle, SAQCMEG, 2506.5, Green (SLT 6-32324E)	1
	8.712-368.0	Nozzle, SAQCMEG, 4006.5, White (SLT 6-32324E)	1
	8.712-378.0	Nozzle, SAQCMEG, 0009, Red (SLT 8-30324E)	1
	8.712-379.0	Nozzle, SAQCMEG, 1509, Yellow (SLT 8-30324E)	1
	8.712-380.0	Nozzle, SAQCMEG, 2509, Green (SLT 8-30324E)	1
	8.712-381.0	Nozzle, SAQCMEG, 4009, White (SLT 8-30324E)	1
	8.712-382.0	Nozzle,SAQCMEG, 0012, Red (SLX 10-25324E)	1
	8.712-383.0	Nozzle, SAQCMEG, 1512, Yellow (SLX 10-25324E)	1
	8.712-384.0	Nozzle, SAQCMEG, 1525, Green (SLX 10-25324E)	1
	8.712-385.0	Nozzle, SAQCMEG, 4012, White (SLX 10-25324E)	1
21	8.750.097.0	Knob, Thermostat	1
22	8.712-190.0	Bezel, Thermostat	1
23	9.196-012.0	Screw, 10-24 x 1/4"	2

▲ Not Shown

EXPLODED VIEW - SPRAY GUN ASSEMBLY

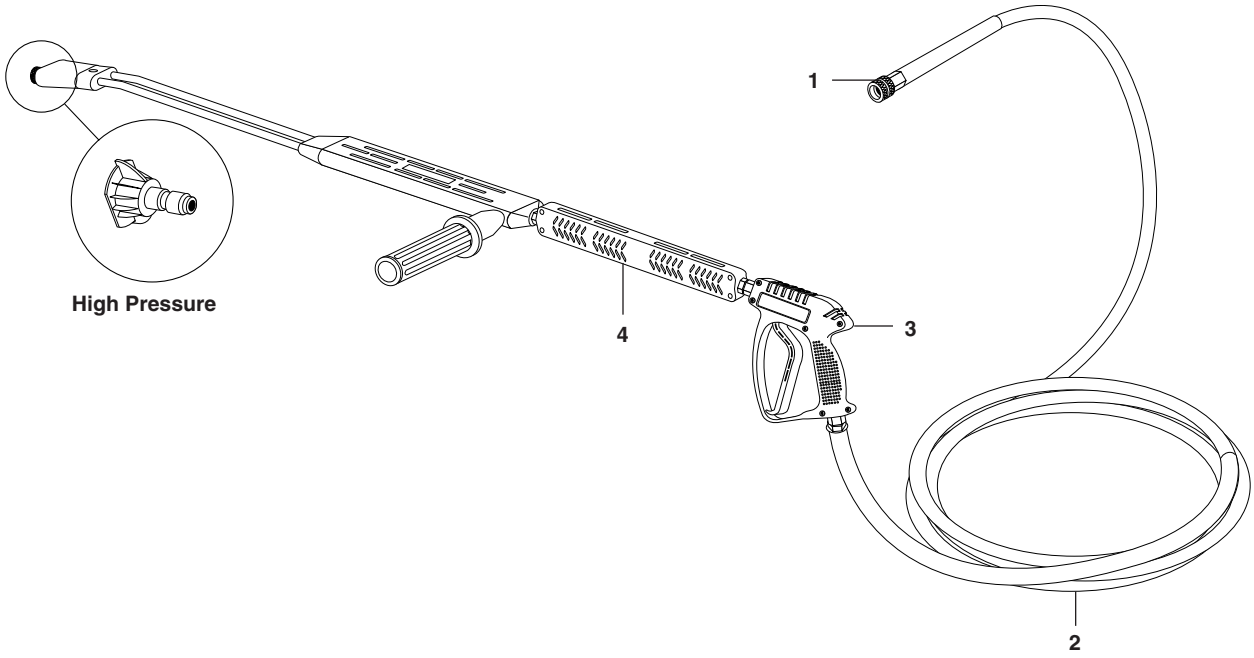

SPRAY GUN ASSEMBLY PARTS LIST

ITEM	PART NO.	DESCRIPTION	QTY
1	9.802-166.0	Coupler, 3/8" Female	1
	9.802-100.0	▲ Quick Coupler O-Ring, 3/8" Replacement Only	1
2	8.739-072.0	Hose, 3/8" x 50' 2-Wire, Tuff-Skin (5-30224E)	1
	8.739-401.0	Hose, 1/2" x 50 ft., 2 Wire, Tuff Flex, (All Models Except 5-30224E)	1
3	8.751-234.0	Gun, Landa, L1050, 5000 PSI, 10.4 GPM	1
4	8.711-308.0	Wand, SS, VP (AL 344) w/Coupler & Soap Nozzle	1
	83-SSVPKIT	▲ Repair Kit AR, Stainless Seat	1

▲ Not Shown

EXPLODED VIEW - FLOAT TANK AND PARTS LIST

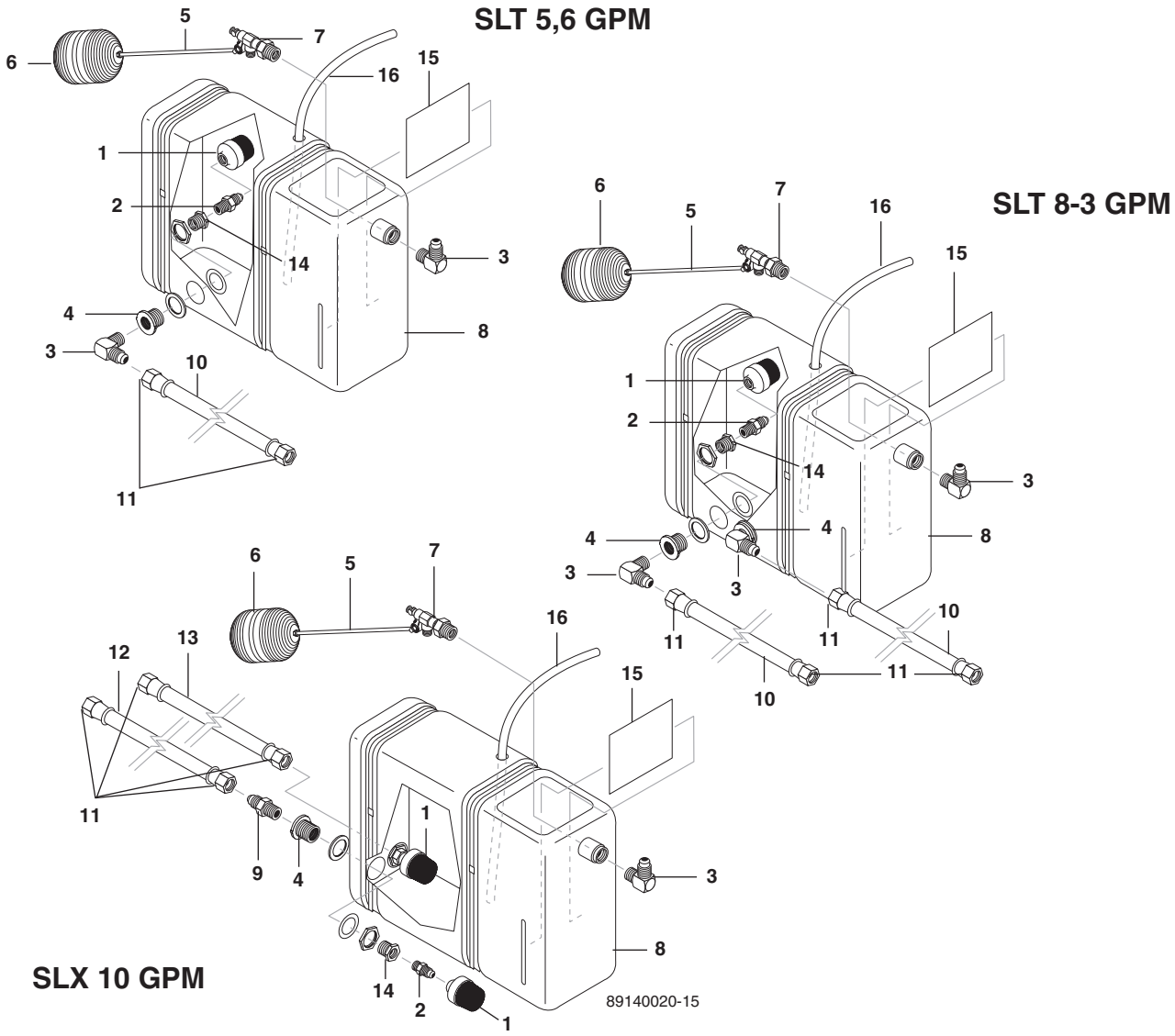

ITEM	PART NO.	DESCRIPTION	QTY
1	8.707-061.0	Strainer, 1/2" Basket	
		(5, 6 GPM)	1
		(8, 10 GPM)	2
2	9.802-128.0	Nipple, 1/2" JIC x 1/2" MPT	
		Pipe (5, 6 GPM)	1
		(8, 10 GPM)	2
3	9.803-557.0	Elbow, 3/4" SAE x 3/4", 90°,	
		Brass (10 GPM)	1
		(5, 6 GPM)	2
		(8 GPM)	3
4	9.802-052.0	Bulkhead, 3/4" Polypro	
		(5, 6 GPM)	1
		(8, 10 GPM)	2
5	8.707-025.0	Stem, 10" Float	1
6	8.706-512.0	Ball, Float, Black Plastic	1
7	8.749-329.0	Valve, 3/4", Float	1
8	8.706-643.0	Tank, Float,	
		7-34" x 20-3/4" x 15"	1

ITEM	PART NO.	DESCRIPTION	QTY
9	8.706-899.0	Nipple, 3/4" JIC x 3/4" Pipe	
		(10 GPM)	2
10	9.802-261.0	Hose, 3/4" Push-On, 30"	
		(5, 6 GPM)	1
		(8 GPM)	2
11	9.802-152.0	Swivel, 3/4" SAE Fem	
		(5, 6 GPM)	2
		(8 GPM)	4
12	9.802-261.0	Hose, 3/4" Push-On	
		(10 GPM)	17.25"
13	9.802-261.0	Hose, 3/4" Push-On	
		(10 GPM)	10"
14	8.706-925.0	Bushing, 3/4" x 1/2" Pipe	
		(5, 6 GPM)	1
		(8, 10 GPM)	2
15	8.706-640.0	Baffle, Plastic Float Tank	1
16	9.802-254.0	Hose, 1/4" Push-on	30"

BURNER ASSEMBLY EXPLODED VIEW

9.804-053.0 (7-00010) SM 230V
8.906-734.0 (7-00011) SM 120V SLT5

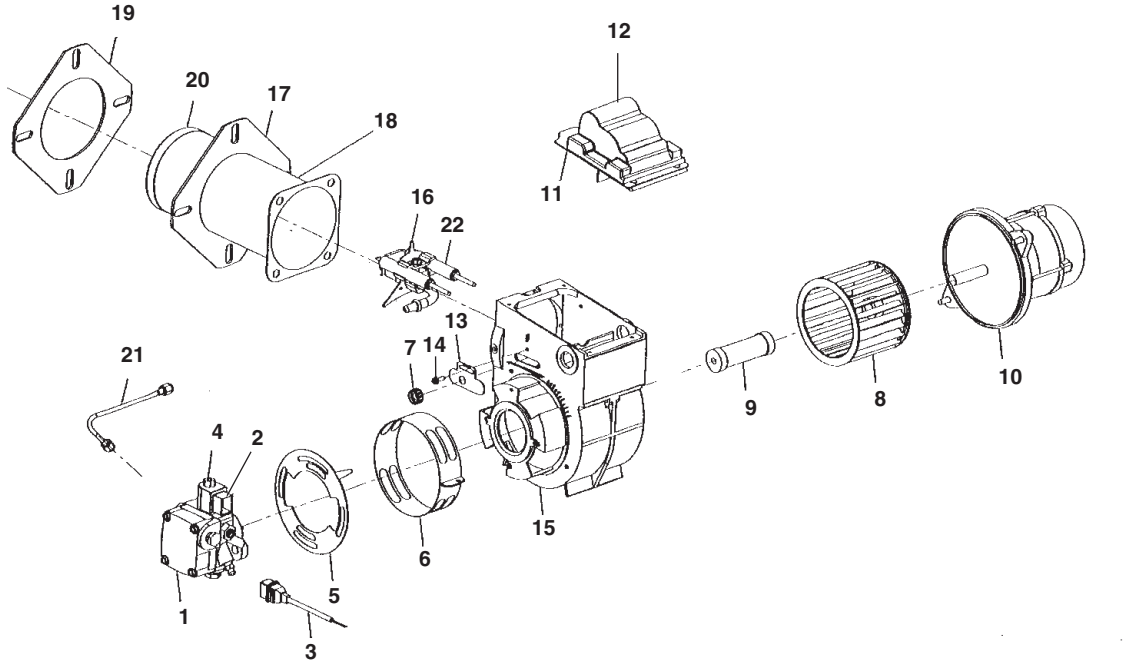

BURNER ASSEMBLY EXPLODED VIEW PARTS LIST

ITEM	PART NO.	DESCRIPTION	QTY
1	7-21844U	Fuel Pump w/120V Solenoid	1
	7-51843U	Strainer Kit w/Gasket	1
2	7-21755U	Solenoid Coil, 120V	1
3	9.802-643.0	Cordset	1
4	7-21877U	Fuel Solenoid Stem	1
5	7-3215	Air Shutter	1
6	7-5151503	Air Band	1
7	9.802-657.0	Spline Nut	1
8	7-2383	Blower Wheel	1
9	7-2433	Fan Coupling	1
10	9.803-056.0	Motor, 120V, Cap Start (7-00011)	
	9.804-054.0	Motor, 230V (7-00010)	1

ITEM	PART NO.	DESCRIPTION	QTY
11	7-51824	Ignitor Assy Complete, 120V (7-00011)	1
	7-21176U	Transformer, 230V (7-00010)	1
12	9.802-665.0	Ignitor Only, 120V (7-00011)	1
13	7-3493	Escutcheon Plate	1
14	7-4292	Escutcheon Plate Screw	1
15	8.717-964.0	Burner Housing	1
16	8.718-217.0	Gun Assembly Complete	1
17	9.802-652.0	Welded Insertion or Flange	1
18	7-SM30VMPW	Air Tube Combination	1
19	9.802-651.0	Burner Gasket	2
20	9.802-634.0	Air Cone F22	1
21	7-5394	Connector Tube Assy, 8"	1
22	9.802-669.0	Electrode with Contact PR	1

CF800 BURNER ASSEMBLY EXPLODED VIEW

8.717-013.0 (7-00001)
8.717-024.0 (7-00002)
8.717-075.0 (7-00008)
8.717-102.0 (7-00050) SLT6, SLT8, SLX10

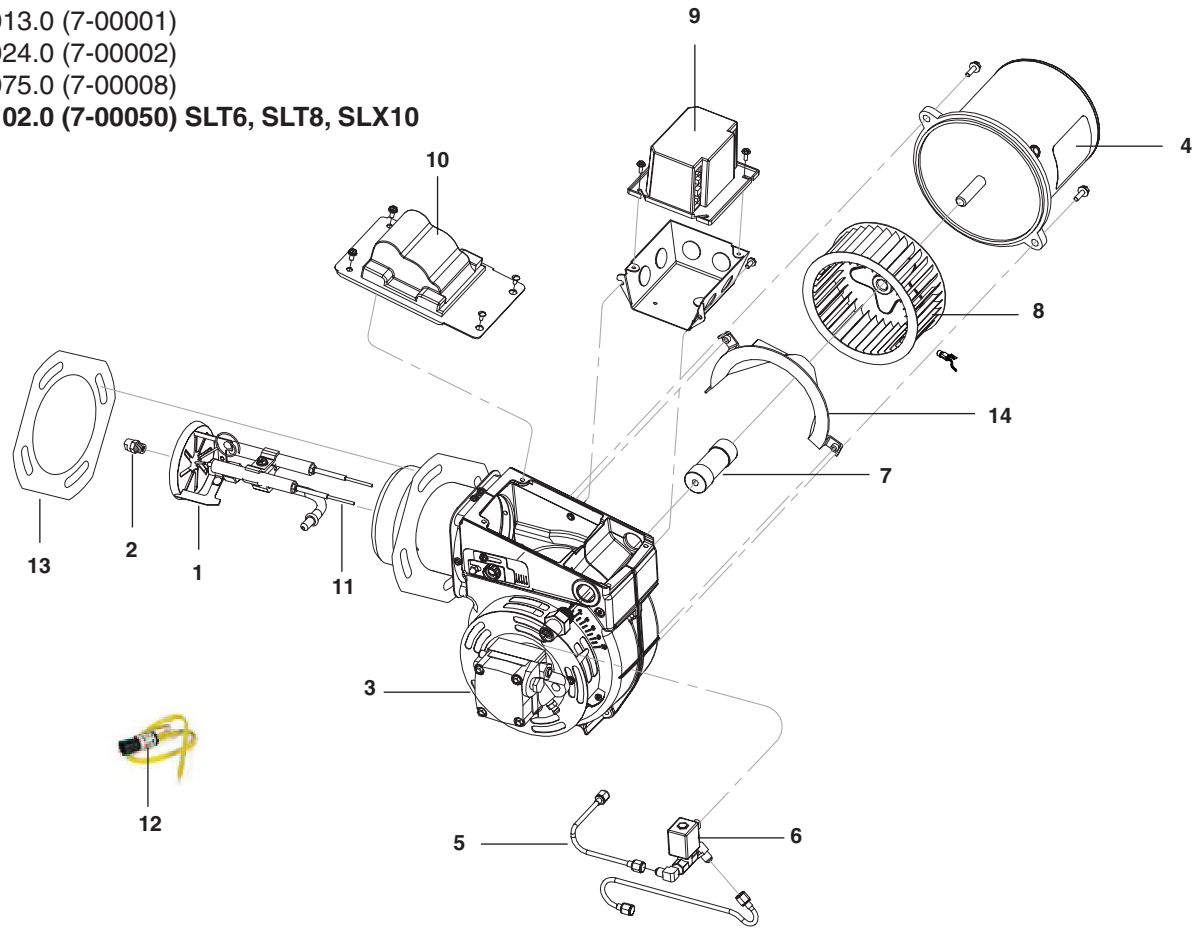

BURNER ASSEMBLY EXPLODED VIEW PARTS LIST

ITEM	PART NO.	DESCRIPTION	QTY
1	8.718-216.0	Nozzle Line Assy (ATC CF60KHS) Includes Air Tube, Head, Nozzle Gun Assy.	1
2	8.717-367.0	Nozzle, 4.5 80B (7-00001, 7-00050) (SLT8, SLX10)	1
	8.700-951.0	Nozzle, 3.5 80B (7-00002, 7-00008)	1
	8.717-378.0	Nozzle, 3.25 80B (SLT6)	1
3	8.717-834.0	Fuel Pump, B2TA-8245 (7-00001)	1
	8.717-832.0	Fuel Pump, B2YA-8916 (7-00002, 7-00008, 7-00050)	1
4	8.701-088.0	Motor, 1/3 HP 120V (21341) (7-00001, 7-00002, 7-00050)	1
	8.750-082.0	Motor, 1/3 HP 240V (21654) (7-00008)	1
5	9.802-667.0	Fuel Line, 8"	1
6	8.717-844.0	Valve, Fuel 120V	1
7	9.803-058.0	Coupling	1
8	8.717-835.0	Blower Wheel, 6-5/16 x 2-3/8	1
9	8.717-719.0	Primary Control, R8184G1294	1
10	9.803-060.0	Ignitor	1
11	8.723-939.0	Electrodes	1
12	9.802-676.0	CAD Cell Photoelectric	1
13	8.750-084.0	Gasket, Flange (31628) (7-00001)	1
	8.750-083.0	Gasket, Flange (31637) (7-00002, 7-00008)	1
	9.802-653.0	Gasket, Flange (31802) (7-00050)	1
14	8.750-085.0	Air Guide (178)	1

PARTS SPECIFICATIONS

			PUMP							ENGINE	
MODEL	PSI	Hi-Pres Nozzle	Pump Type	Pump Model #	Pump Part #	Pump Pulley	Pulley Part #	Bushing	Bushing Part #	Engine	Engine Part #
SLT5-30224E	3000	6	Landa	LT-6035\L	8.904-883.0	2BK90H	8.715-593.0	25MM	9.802-403.0	Vanguard *(479CC)*	9.802-325.0
SLT6-32324E	3200	6.5	Landa	LT-6035\L	8.904-883.0	2BK80H	8.715-592.0	25MM	9.802-403.0	Honda/GX630*(688CC)*	8.750-495.0
SLT8-30324E	3000	9	Landa	LX-8030\L	8.904-889.0	3BK80H	8.715-618.0	25MM	9.802-403.0	Honda/GX660*(688CC)*	8.750-496.0
SLX10-25324E	2500	12	Landa	LX-1025\L	8.904-891.0	3BK80H	8.715-618.0	25MM	9.802-403.0	Honda/GX660*(688CC)*	8.750-496.0

PARTS SPECIFICATIONS

	ENGINE				GENERATOR							
Model	Engine Pulley	Pulley Part #	Engine Bushing	Bushing Part #	Generator Pulley	Pulley Part#	Generator Bushing	Bushing Part #	Belt(Qty)	Belt Part #	Generator Belt(Qty)	Belt Part #
SLT5-30224E	3TB34	9.802-392.0	P2 x 1	9.802-404.0	BK34H	9.802-378.0	H X 5/8”	9.802-397.0	BX35(2)	9.802-415.0	BX22(1)	9.802-412.0
SLT6-32324E	3TB36	9.802-393.0	P2 x 1	9.802-404.0	BK34H	9.802-378.0	H X 5/8”	9.802-397.0	BX35(2)	9.802-415.0	BX22(1)	9.802-412.0
SLT8-30324E	4B34	8.715-623.0	SD x 1-1/8	8.715-660.0	BK34H	9.802-378.0	H X 5/8”	9.802-397.0	BX34(3)	8.715-695.0	BX22(1)	9.802-412.0
SLX10-25324E	4B36	8.715-603.0	SD x 1-1/8	8.715-660.0	BK34H	9.802-378.0	H X 5/8”	9.802-397.0	BX34(3)	8.715-695.0	BX22(1)	9.802-412.0

LT.1 SERIES PUMP EXPLODED VIEW

8.904-869.0 LT4035.1 Right
8.904-870.0 LT4035.1 Left
8.904-871.0 LT4040.1 Right
8.904-872.0 LT4040.1 Left
8.904-874.0 LT5030.1 Right
8.904-879.0 LT5030.1 Left
8.904-881.0 LT6035.1 Right
8.904-883.0 LT6035.1 Left

G3 Evolution

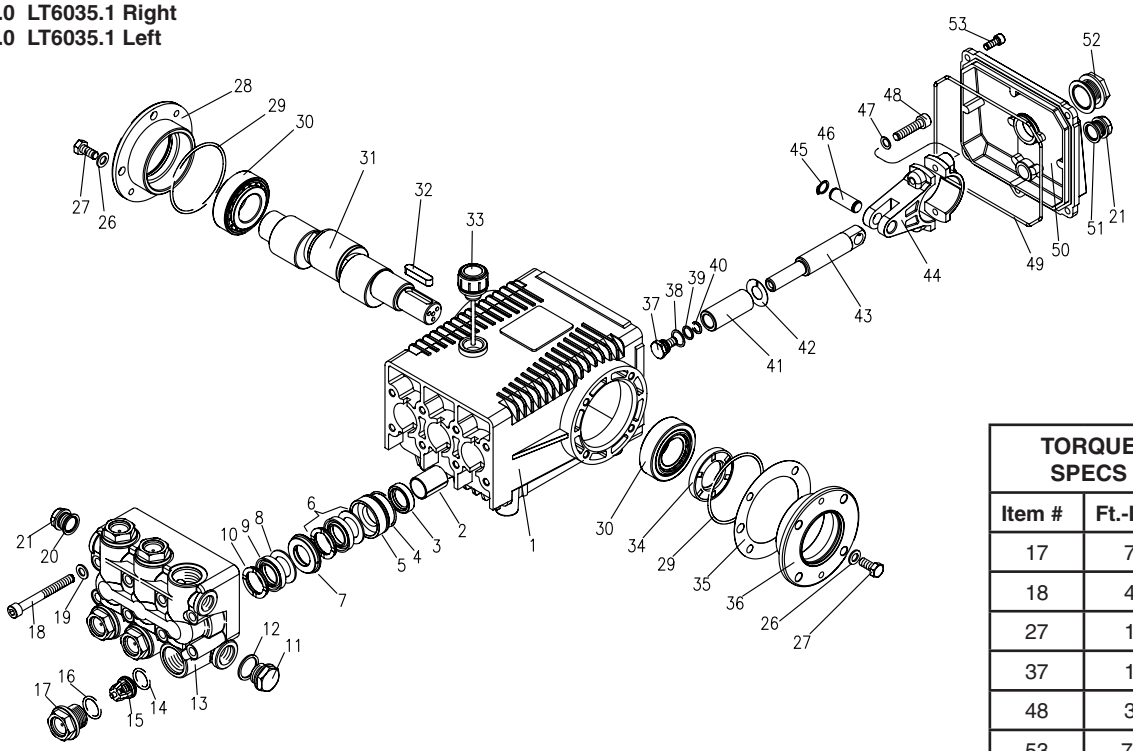

TORQUE SPECS	
Item #	**Ft.-Lbs.**
17	75
18	45
27	18
37	10
48	30
53	7.6

LT.1 SERIES PUMP EXPLODED VIEW PARTS LIST

ITEM	PART NO.	DESCRIPTION	QTY
1	9.803-163.0	Crankcase	1
2	9.803-195.0	Plunger Guide	3
3*	See Kit	Plunger Oil Seal	3
4*	See Kit	O-Ring Ø1.78 x 31. 47	3
5*	See Kit	"Pressure Ring, Brass	3
6*	See Kit	"U" Seal Low Pressure	3
7*	See Kit	Intermediate Ring, Brass	3
8*	See Kit	Support Ring, Teflon Bronze	3
9 *	See Kit	"U" Seal High Pressure	3
10*	See Kit	Support Ring	3
11	9.802-926.0	Brass Plug, 1/2"	1
12	9.803-199.0	Copper Washer 1/2"	1
13	9.802-933.0	Manifold Head	1
14*	See Kit	O-Ring Ø2.62 x 17.13	6
15*	See Kit	Valve Assembly	6
16*	See Kit	O-Ring Ø2.62 x 20.29	6
17	9.802-928.0	Valve Plug	6
18	9.802-943.0	Manifold Stud Bolt	8

ITEM	PART NO.	DESCRIPTION	QTY
19	9.802-890.0	Washer	8
20	9.803-198.0	Copper Washer 3/8"	1
21	9.802-925.0	Brass Plug 3/8"	1
26	9.802-884.0	Washer	8
27	9.802-944.0	Hexagonal Screw	8
28	9.803-182.0	Closed Bearing Housing	1
29	9.803-186.0	O-Ring Ø2.62 x 71.12	2
30	9.803-160.0	Roller Bearing, Tapered	2
31	9.803-148.0 5030.1, 6035.1) 9.803-149.0	Crankshaft (GT4040.1, Crankshaft (GT 4035.1)	1
32	9.803-167.0	Crankshaft Key	1
33	9.802-923.0	Oil Dip Stick	1
34	9.803-139.0	Crankshaft Seal	1
35	9.803-177.0	Shim	2
36	9.803-181.0	Bearing Housing	1
37*	See Kit	Plunger Bolt	3
38*	See Kit	Copper Spacer	3

LT.1 SERIES PUMP PARTS LIST (CONT)

ITEM	PART NO.	DESCRIPTION	QTY
39*	See Kit	O-Ring Ø1.78 x10.82	3
40*	See Kit	Teflon Ring	3
41*	See Kit	Plunger	3
42*	See Kit	Copper Spacer	3
43	9.803-143.0	Plunger Rod	3
44	9.803-157.0	Connecting Rod	3
45	9.802-912.0	Snap Ring	6
46	9.802-915.0	Connecting Rod Pin	3
47	9.802-889.0	Spring Washer	6
48	9.802-937.0	Connecting Rod Screw	6
49	9.803-194.0	O-Ring Ø2.62 x 152.07	1
50	9.803-166.0	Crankcase Cover	1
51	9.803-197.0	Gasket, G3/8	1
52	9.803-202.0	Sight Glass G3/4	1
53	9.802-939.0	Cover Screw	5

* Part available in kit (See below)

REPAIR KIT NUMBER	**8.916-488.0**	**8.916-487.0**	**8.916-322.0**	**8.916-323.0**	**9.802-607.0**	**9.802-611.0**
KIT DESCRIPTION	Plunger "U" Seal 20mm LT-4040.1, LT-6035.1 LT-4035.1	Plunger "U" Seal 22mm LT-5030.1	"U" Seal Packing Assy 20mm LT-4040.1 LT-6035.1 LT-4035.1	"U" Seal Packing Assy 22mm LT-5030.1	Plunger 20mm LT-4040.1 LT-6035.1 LT-4035.1	Plunger 22mm LT-5030.1
ITEM NUMBERS INCLUDED	4, 6, 8, 9, 10	4, 6, 8, 9, 10	4, 5, 6, 7, 8, 9,10	4, 5, 6, 7, 8, 9,10	37, 38, 39, 40, 41, 42	37, 38, 39, 40, 41, 42
NUMBER OF CYLINDERS KIT WILL SERVICE	3	3	1	1	1	1

REPAIR KIT NUMBER	**9.802-603.0**	**9.802-606.0**
KIT DESCRIPTION	Complete Valve (all pumps)	Plunger Oil Seals (all pumps)
ITEM NUMBERS INCLUDED	14, 15, 16	3
NUMBER OF CYLINDERS KIT WILL SERVICE	6	3

LX.1 SERIES PUMP EXPLODED VIEW

8.904-888.0 LX 8030R.1
8.904-889.0 LX 8030L.1
8.904-892.0 LX 1025R.1
8.904-891.0 LX 1025L.1

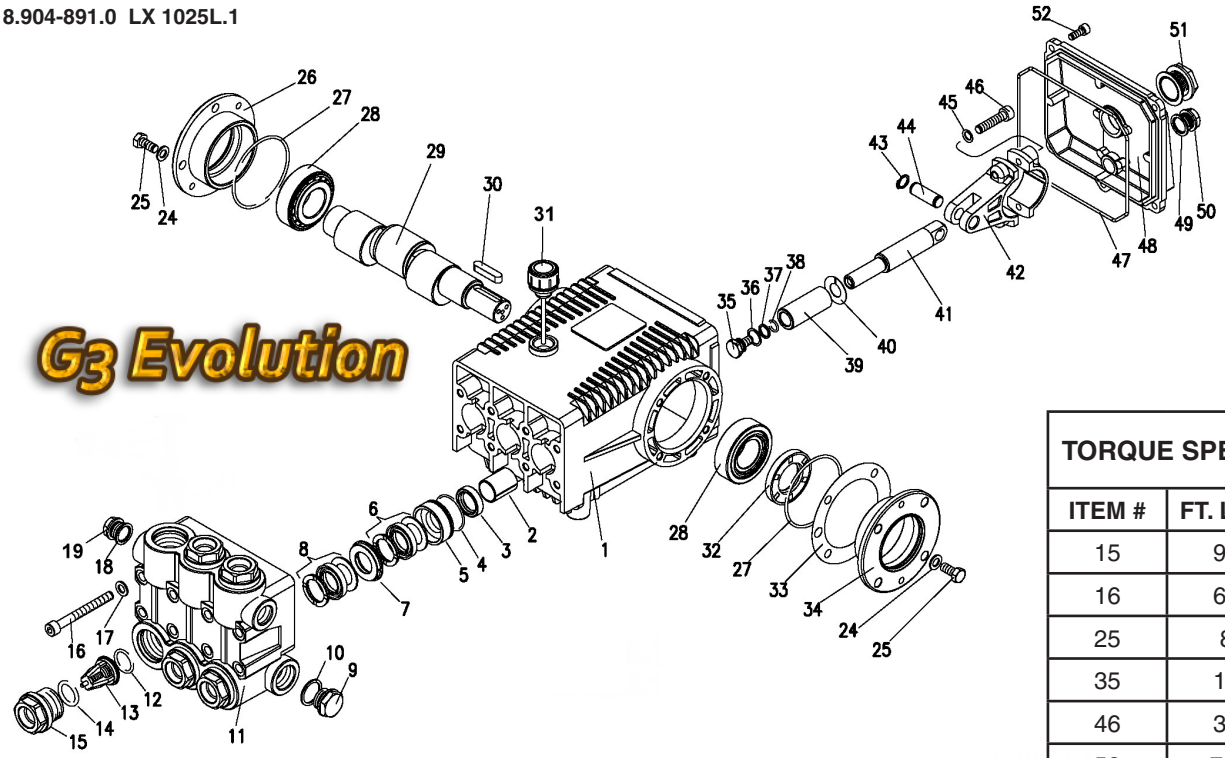

TORQUE SPECS	
ITEM #	FT. LBS.
15	95
16	60
25	8
35	10
46	30
52	7.6

LX.1 SERIES PUMP EXPLODED VIEW PARTS LIST

ITEM	PART NO.	DESCRIPTION	QTY
1	9.803-163.0	Crankcase	1
2	9.803-195.0	Plunger Guide	3
3*	See Kit Below	Plunger Oil Seal	3
4*	See Kit Below	O-Ring Ø1.78 x 37.82	3
5*	See Kit Below	Pressure Ring, 25mm	3
6*	See Kit Below	U-Seal, 25mm	3
7*	See Kit Below	Intermediate Ring 25mm	6
8*	See Kit Below	U-Seal, 25mm	3
9	9.803-285.0	Brass Plug, 3/4	1
10	9.803-286.0	Copper Washer 3/4	1
11	9.802-935.0	Manifold Housing	1
12*	9.803-291.0	O-Ring Ø2.62 x 23.47	6
13*	See Kit Below	Valve Assembly	6
14*	9.803-287.0	O-Ring Ø3.53 x 25.80	6
15	9.802-930.0	Valve Plug	6
16	9.802-942.0	Manifold Stud Bolt	8
17	9.802-890.0	Lock Washer	8

ITEM	PART NO.	DESCRIPTION	QTY
18	9.803-199.0	Copper Washer 1/2	1
19	9.802-926.0	Brass Plug 1/2	1
24	9.802-884.0	Washer	8
25	9.802-944.0	Flange Screw	8
26	9.803-182.0	Closed Bearing Housing	1
27	9.803-186.0	O-Ring Ø2.62 x 71.12	2
28	9.803-160.0	Roller Bearing	2
29	9.803-288.0	Crankshaft (LX 8030)	1
	9.803-289.0	Crankshaft (LX 1025)	1
30	9.803-167.0	Crankshaft Key	1
31	9.802-923.0	Oil Dip Stick	1
32	9.803-139.0	Crankshaft Seal	1
33	9.803-177.0	Shim	2
34	9.803-181.0	Bearing Housing	1
35*	See Kit Below	Plunger Bolt	3
36*	See Kit Below	Copper Spacer	3

LX.1 SERIES PUMP EXPLODED VIEW PARTS LIST (CONT.)

ITEM	PART NO.	DESCRIPTION	QTY
37*	See Kit Below	O-Ring Ø1.78x10.82	3
38*	See Kit Below	Teflon Ring	3
39*	See Kit Below	Plunger 25mm	3
40*	See Kit Below	Copper Spacer	3
41	9.803-143.0	Plunger Rod	3
42	9.803-157.0	Connecting Rod	3
43	9.802-912.0	Snap Ring	6
44	9.802-915.0	Connecting Rod Pin	3
45	9.802-889.0	Spring Washer	6
46	9.802-937.0	Connecting Rod Screw	6
47	9.803-194.0	O-Ring Ø2.62 x 152.07	1
48	9.803-166.0	Crankcase Cover	1
49	9.803-197.0	Gasket, G3/8	1
50	9.802-925.0	Brass Plug 3/8	1
51	9.803-202.0	Sight Glass G3/4	1
52	9.802-939.0	Cover Screw	5

KIT NUMBERS	8.725-364.0	8.725-365.0	9.802-614.0	9.802-608.0	9.802-606.0
KIT DESCRIPTION	Plunger Seal 25 mm	Seal Packing 25mm	Plunger 25mm	Complete Valve	Plunger Oil Seals
ITEMS NUMBERS INCLUDED	4, 6, 8	4, 5, 6, 7, 8	35, 36, 37, 38, 39, 40	12, 13, 14	3
NUMBER OF CYLINDERS KIT WILL SERVICE	3	1	1	6	3

VRT3 UNLOADER EXPLODED VIEW AND PARTS LIST

8.750-297.0, 8 GPM, 2320 PSI
8.750-298.0, 8 GPM, 3630 PSI
8.750-299.0, 8 GPM, 4500 PSI

ITEM	PART NO.	DESCRIPTION	QTY
25	8.750-712.0	Outlet Fitting	1
18	8.750-713.0	Knob, Unloader	1
	8.750-709.0	Repair Kit, VRT3, 2320/3630 PSI	
	8.750-710.0	Repair Kit, VRT3, 4500 PSI	
		(Kit Items: 1, 4, 8-12, 16, 21-22)	

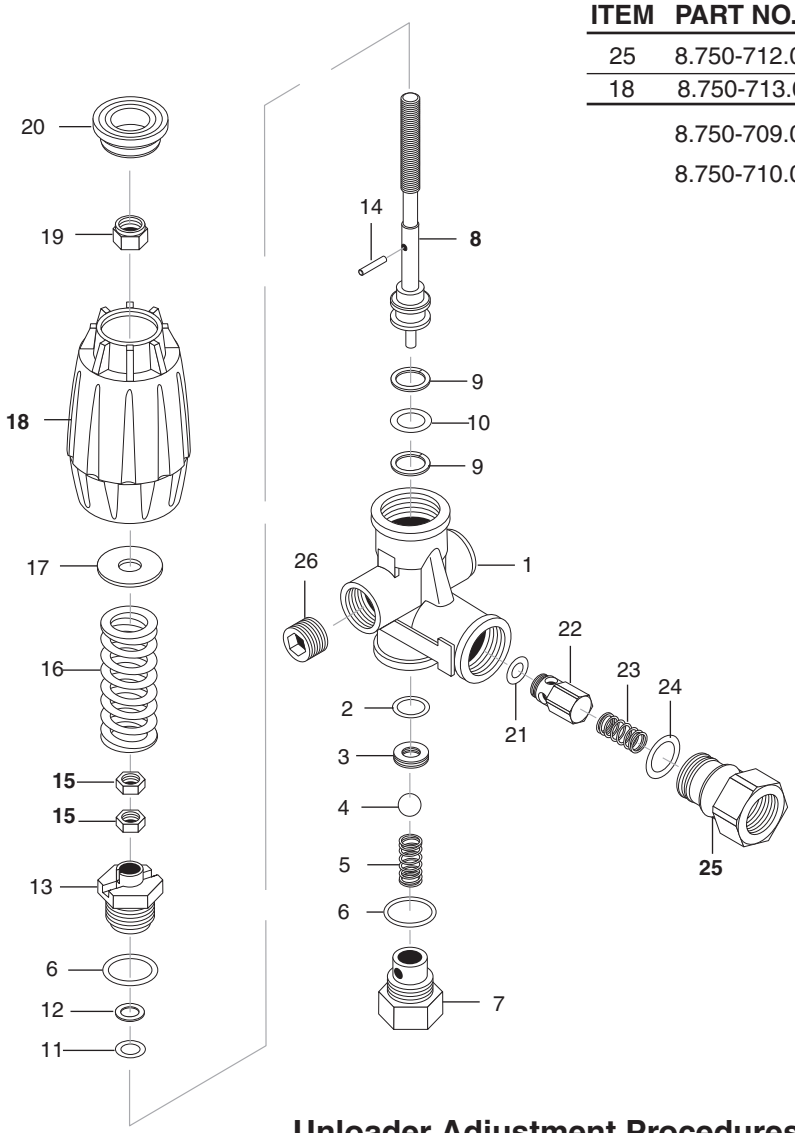

Unloader Adjustment Procedures

1. Remove lock nut (Item 19).
2. Remove adjustment knob (Item 18).
3. Loosen the two (2) nuts (Item 15), move them upward on stem (Item 8) until you see 4 or more threads below the nut.
4. Re-attach adjusting knob (Item 18).
5. Start machine. Open the trigger of the spray gun. Increase pressure by turning adjustment knob (Item 18) clockwise until pressure is at the desired operating pressure.
6. Remove the adjustment knob (Item 18), tighten the lower nut (Item 15) tightly against the upper nut (Item 15). Re-attach adjustment knob (Item 18) and screw down until contact is made with the nuts (Items 15). Screw down lock nut (Item 19) onto the stem (Item 8) until the threads cut into the nylon insert of the lock nut (Item 19).

*****If adjustment knob (Item 18) **DOES NOT** make contact with upper nut (Items 15), remove adjusting knob (Item 18), re-adjust (raise) nuts (Items 15) on stem (Item 8) and re-attach adjustment knob (Item 18), then repeat step #6.

******If adjustment knob (Item 18) **DOES** make contact with upper nut; release the trigger of the spray gun and watch the pressure gauge for the pressure increase ("spike"). This "spike" **SHOULD NOT** exceed 500 psi above the operating pressure. If "spike" pressure exceeds the 500 psi limit, remove the adjusting knob (Item 18) and re-adjust (lower) the nuts (Items 15) on the stem (Item 8). Re-attach the adjusting knob (Item 18), then repeat step #6.

LANDA®

LANDA LIMITED NEW PRODUCT WARRANTY
PRESSURE WASHERS

WHAT THIS WARRANTY COVERS

All LANDA pressure washers are warranted by LANDA to the original purchaser to be free from defects in materials and workmanship under normal use, for the periods specified below. This Limited Warranty is subject to the exclusions shown below, is calculated from the date of the original purchase, and applies to the original components only. Any parts replaced under this warranty will assume the remainder of the part's warranty period.

SEVEN YEAR PARTS AND ONE YEAR LABOR WARRANTY:

Components manufactured by LANDA, such as frames, handles, top and bottom wraps, float tanks, fuel tanks, belt guards, and internal components on the oil-end of Landa manufactured pumps. General, AR, Liberty, Comet and swash and wobble plate pumps have a one year warranty. Heating coils have a five year warranty from date of original machine purchase.

ONE YEAR PARTS AND ONE YEAR LABOR WARRANTY:

All other components, excluding normal wear items as described below, will be warranted for one year on parts and labor. Parts and labor warranty on these parts will be for one year regardless of the duration of the original component manufacturer's part warranty.

WARRANTY PROVIDED BY OTHER MANUFACTURERS:

Motors, generators, and engines, which are warranted by their respective manufacturers, are serviced through these manufacturers' local authorized service centers. LANDA is not authorized and has no responsibility to provide warranty service for such components.

WHAT THIS WARRANTY DOES NOT COVER

This warranty does not cover the following items:

1. Normal wear items, such as nozzles, spray guns, discharge hoses, wands, quick couplers, seals, filters, gaskets, O-rings, packings, pistons, pump valve assemblies, strainers, belts, brushes, rupture disks, fuses, pump protectors.
2. Damage or malfunctions resulting from accidents, abuse, modifications, alterations, incorrect installation, improper servicing, failure to follow manufacturer's maintenance instructions, or use of the equipment beyond its stated usage specifications as contained in the operator's manual.
3. Damage due to freezing, chemical deterioration, scale build up, rust, corrosion, or thermal expansion.
4. Damage to components from fluctuations in electrical or water supply.
5. Normal maintenance service, including adjustments, fuel system cleaning, and clearing of obstructions.
6. Transportation to service center, field labor charges, or freight damage.

WHAT YOU MUST DO TO OBTAIN WARRANTY SERVICE

While not required for warranty service, we request that you register your LANDA pressure washer by returning the completed registration card. In order to obtain warranty service on items warranted by LANDA, you must return the product to your Authorized LANDA Dealer, freight prepaid, with proof of purchase, within the applicable warranty period. If the product is permanently installed, you must notify your Authorized LANDA Dealer of the defect. Your Authorized LANDA Dealer will file a claim with Landa, who must subsequently verify the defect. In most cases, the part must be returned to LANDA freight prepaid with the claim. For warranty service on components warranted by other manufacturer's, your Authorized LANDA Dealer can help you obtain warranty service through these manufacturers' local authorized service centers.

LIMITATION OF LIABILITY

LANDA'S liability for special, incidental, or consequential damages is expressly disclaimed. In no event shall LANDA'S liability exceed the purchase price of the product in question. LANDA makes every effort to ensure that all illustrations and specifications are correct, however, these do not imply a warranty that the product is merchantable or fit for a particular purpose, or that the product will actually conform to the illustrations and specifications. Our obligation under this warranty is expressly limited at our option to the replacement or repair at a service facility or factory designated by us, of such part or parts as inspection shall disclose to have been defective. **THE WARRANTY CONTAINED HEREIN IS IN LIEU OF ALL OTHER WARRANTIES, EXPRESS OR IMPLIED, INCLUDING ANY IMPLIED WARRANTY OF MERCANTABILITY OR FITNESS FOR A PARTICULAR PURPOSE ARE EXPRESSLY LIMITED TO THE DURATION OF THIS WRITTEN WARRANTY.** LANDA does not authorize any other party, including authorized LANDA Dealers, to make any representation or promise on behalf of LANDA, or to modify the terms, conditions, or limitations in any way. It is the buyer's responsibility to ensure that the installation and use of LANDA products conforms to local codes. While LANDA attempts to assure that its products meet national codes, it cannot be responsible for how the customer chooses to use or install the product. Some states do not allow limitations on how long an implied warranty lasts or the exclusion or limitation of incidental or consequential damages, so the above limitation or exclusion may not apply to you. This warranty gives you specific legal rights and you may also have other rights which vary from state to state.

LANDA

www.landa.com

LANDA®

Form # 8.914-002.0 • Revised 02/12a • Printed in U.S.A. by Landa