# LANDA®

# OPERATOR'S MANUAL

## ■ ECOS 7000 1.103-825.0

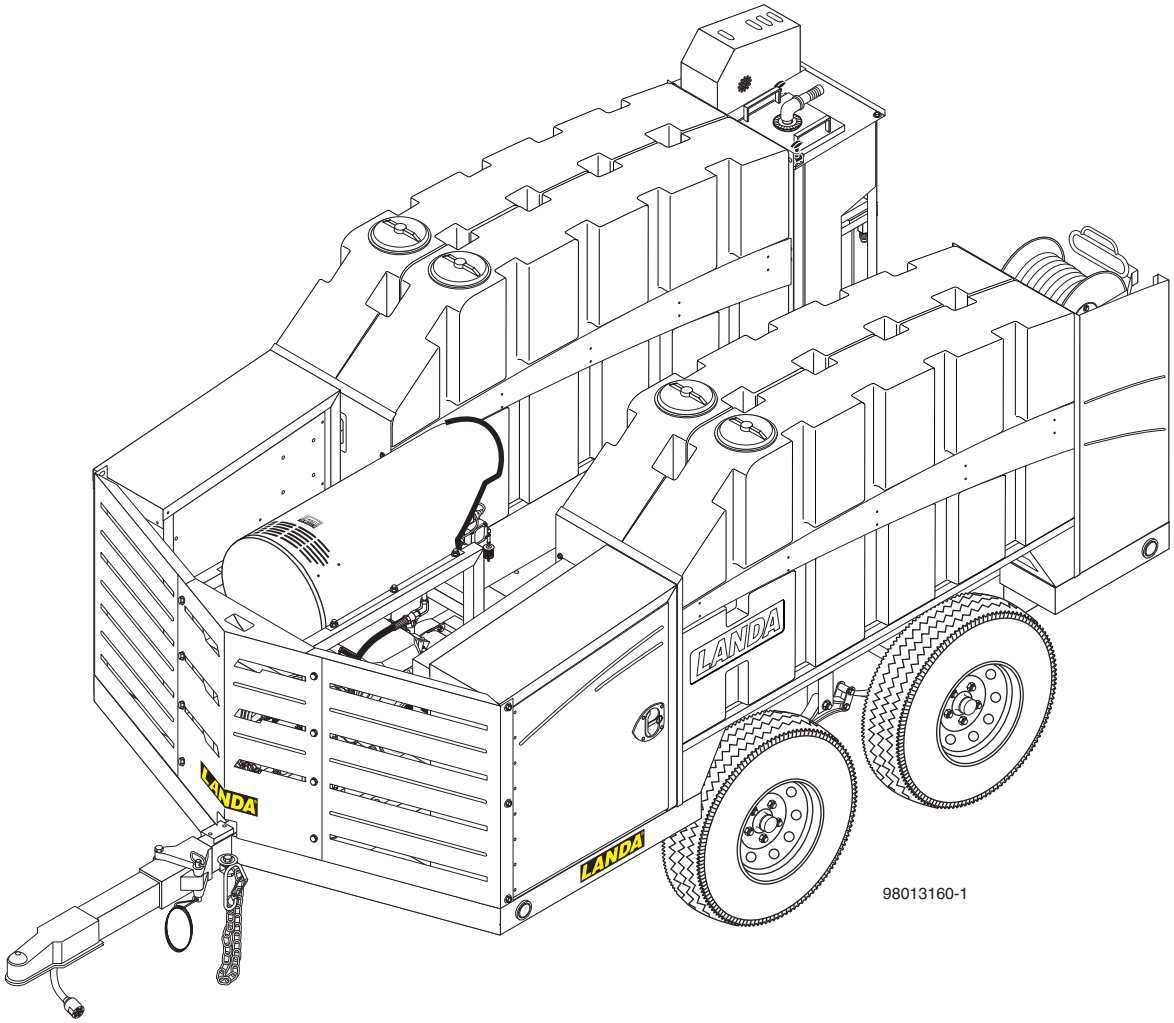


**US Patent: US-2011-0232696-A1**

For technical assistance or the dealer nearest you consult our web page at
**www.landa.com**

9.801-316.0

# CONTENTS



Model Number _____

Serial Number _____

Date of Purchase _____

The model and serial numbers will be found on a decal attached to the pressure washer frame. You should record both serial number and date of purchase and keep in a safe place for future reference.

# INTRODUCTION & TRAILER INFORMATION

Thank you for purchasing a Landa trailer.

This manual is designed to provide information for you to understand, use and maintain your Landa trailer.

### Owner/User Responsibility:

The owner and/or user must have an understanding of the manufacturer's operating instructions and warnings before using this equipment. Warning information should be emphasized and understood. If the operator is not fluent in English, the manufacturer's instructions and warning shall be read to and discussed with the operator in the operator's native language by the purchaser/owner, making sure that the operator comprehends its contents.

Owner and/or user must study and maintain for future reference the manufacturer's instructions.

The operator must know how to stop the machine quickly and understand the operation of all controls. Never permit anyone to operate the engine without proper instructions.

**This manual should be considered a permanent part of the equipment and should remain with it if unit is resold.**

**When ordering parts, please specify model and serial number. Use only identical replacement parts.**

**This machine is to be used only by trained operators.**

# MACHINE SAFETY

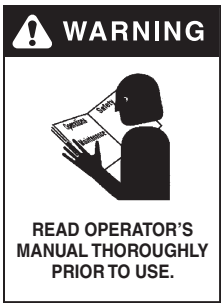


***WARNING: To reduce the risk of injury, read operating instructions carefully before using.***

1. Read the owner's manual thoroughly. Failure to follow instructions could cause malfunction of the machine and result in death, serious bodily injury and/or property damage.
2. The best insurance against an accident is precaution and knowledge of this equipment.

# REPORTING SAFETY DEFECTS

If you believe that your vehicle has a defect which could cause a crash or could cause injury or death, you should immediately inform the National Highway Traffic Safety Administration (NHTSA) in addition to notifying customer.

If NHTSA receives similar complaints, it may open an investigation, and if it finds that a safety defect exists in a group of vehicles, it may order a recall and remedy campaign. However, NHTSA cannot become involved in individual problems between you, your dealer or customer.

To contact NHTSA, you may either call the Auto Safety Hot line toll-free at 1-800-424-9393 (or 366-0123 in Washington, DC area) or write to NHTSA, U.S. Department of Transportation, Washington, DC 20590. You can also obtain other information about motor vehicle safety from the Hot line.

### Trailer Registration Procedures

Take the purchase invoice and the Certificate of Origin for that particular trailer to your local licensing authority. The name of this agency varies by local — Registrar of Motor Vehicles, Department of Motor Vehicles (DMV), Bureau of Motor Vehicles to list a few. In rare instances the agency will want to inspect the trailer. Do not delay, as there is sometimes a one-time sales tax collected beyond fees and time limits apply. Contact Customer Service at 1-800-245-6200 or 412-771-6300 from 8:00 am to 5:00 PM.

# CHECKLIST

### Before Your First Trip

- Tire Pressure and Tire Condition
- Burnish Brakes (See page 5)
- Brakes/Brake Controllers
- Breakaway Battery Charge
- Hitch & Safety Chains
- 12V Running Lights
- Distribution and Security
- All Jacks "Up" in Travel Position

***WARNING: Lug nuts are prone to loosen after initial installation, witch can lead to death or serious injury. Check lug nuts for tightness on a new trailer or when wheel(s) have been remounted after the first 10, 25 and 50 miles of driving.***

Your dealer, in all probability, checked each of these points before you took delivery. However, these are key things you should recheck before taking your trailer on the road for the first time.

# WHAT TO CHECK AND HOW TO CHECK

### Tire Pressure

Proper air pressure for your tires is printed on the sidewall. Check pressure while tires are cold. Do not raise or lower pressure to meet load. Pressure other than recommended pressure will lead to excessive tire

# TRAILER INFORMATION

wear or tire failure. Balancing recommended. Preferred balancing method is to center off of stud holes, since 13" through 16.5" wheels are not hub piloted.

## Wheels

Check wheels for hole elongation or "out of round". This condition can be caused by lug nuts not being tight or being too tight. Trailer wheels can be damaged by chuck holes or curb jumping. You may not be aware of the road shock to the wheels without periodic checks. Replace any wheel that is bent. Replace any wheel if you see elongation of the bolt holes.

## Wheel Lugs

Wheel lug nuts must be tightened with a torque wrench. Refer to the chart below for proper torque

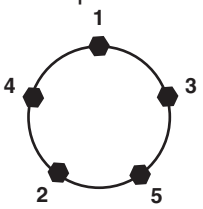


1. Start all bolts or nuts by hand to prevent cross threading.
2. Tighten bolts or nuts following sequence at right.
3. The tightening of the fasteners should be done in stages. Following the recommended sequence, tighten fasteners per wheel torque chart below.
4. Wheel nuts/bolts should be torqued before first road use and after each wheel removal. Check and re-torque after the first 10 miles, 25 miles and again at 50 miles. Check periodically thereafter

### Wheel Torque Requirements

**TORQUE SEQUENCE**

| Wheel Size | 1st Stage | 2nd Stage | 3rd Stage |
|---|---|---|---|
| 15" | 20 - 25 ft. lbs | 50 - 60 ft. lbs | 90 - 120 ft. lbs |

## Ball Coupler Hitches

Coupler assembly includes a latch lever and latch lever safety pin or hitch pin. Be sure the latch lever is locked and the pin properly secured before moving your trailer. The pin can be engaged fully only if ball is properly seated in the coupler.

## Hitch Balls

These come in a variety of diameters and capacities. The GVWR (General Vehicle Weight Rating) capacity is always stamped on the ball. Use a 2-5/16" ball. **Always** be sure the hitch ball at least matches the GVWR of your trailer. **Always** be sure the diameter of the hitch ball matches the coupler diameter. **Never** attempt to tow your trailer with improper size ball. **Always** keep ball greased to avoid excessive wear. Replace worn hitch ball or locking dogs promptly.

## Tires

Before mounting tires onto wheels make certain that the rim size and contour is approved for the tire as shown in the Tire and Rim Association Yearbook or the tire manufacturer's catalog. Also make sure the tire will carry the rated load. If the load is not equal on all tires due to trailer weight distribution, use the tire rated for the heaviest wheel position.

**NOTE:** The capacity rating molded into the sidewall of the tire is not always the proper rating for the tire if used in a trailer application. Use the following guideline:

1. LT and ST tires: use the capacity rating molded into the tire.
2. Passenger Car Tires: Use the capacity rating molded into the tire sidewall divided by 1.10.

Use tire mounting procedures as outlined by the Rubber Manufacturer's Association or the tire manufacturers.

Tire inflation pressure is the most important factor in tire life. Inflation pressure should be as recommended by the manufacturer for the load. (50psi recommended) Pressure should be checked cold before operation. Do not bleed air from tires when they are hot. Check inflation pressure weekly during use to insure the maximum tire life and tread wear. The following tire wear diagnostic chart will help you pinpoint the causes and solutions of tire wear problems.

**NOTE:** Tire wear should be checked frequently because once a wear pattern becomes firmly established in a tire it is difficult to stop, even if the underlying cause is corrected.

| | | | |
|---|---|---|---|
|  | **Center Wear** | Over Inflation | Adjust pressure to particular load per tire catalog. |
|  | **Edge Wear** | Under Inflation | Adjust pressure to particular load per tire catalog. |
|  | **Side Wear** | Loss of camber or overloading | Make sure load doesn't exceed axle rating. |
|  | **Cup-ping** | Out of balance | Check bearing adjustment and balance tires. |
|  | **Flat Spots** | Wheel lockup & tire skidding | Avoid sudden stops when possible and adjust brakes. |

# TRAILER INFORMATION

## Safety Chains

Your trailer is equipped with safety chains that meet the requirements of D.O.T. Regulations 393.70.

Always attach the chains by crossing them, forming a "cradle". If your coupler disengages for any reason, the "cradle" will keep the hitch from dragging on the ground. You'll be able to make an easier and safer stop.

## Safety Chain Hook-Up

Abrasion (possibly from dragging on the ground) or unusual stress (like the situation described above) can weaken the links, making them unsafe for trailering. If you detect any of these conditions, replace the safety chains! If chains are too long, twist to shorten, and prevent dragging.

## Brakes

Your trailer is equipped with electric brakes.

## Burnishing the Brakes

Brakes on a new trailer may tend to "grab" or pulsate.

This is normal. To correct the situation, pull the trailer with the trailer brake control slightly engaged a short distance (about 1000 ft. or until trailer does not grab or pull to one side anymore). This action smooths down the brake bands.

**NOTE:** Do not lock up the wheels.

## Breakaway Battery on A-Frame

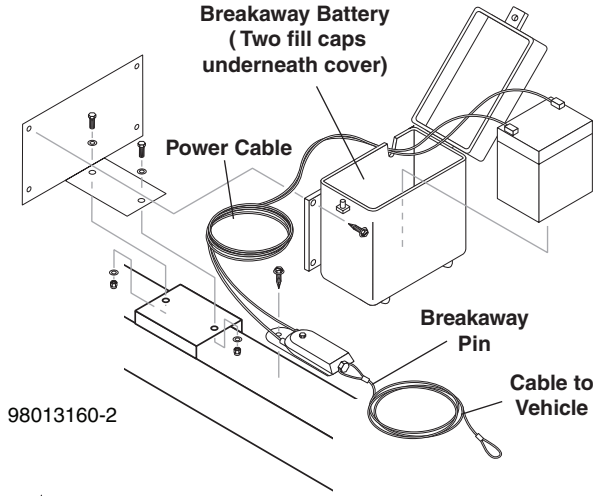


***CAUTION: Your trailer maybe outfitted with a battery that operates a Brake away control. This battery must be kept in a charged condition during operation and storage. The battery could prevent the normal operation of the brake if the trailer becomes uncoupled and/or freeze and break if it becomes discharged.***

## Breakaway Switch & D.O.T. Wet Cell Battery

After hitching to the tow vehicle, pull the safety pin on the breakaway switch. Check to see if system is operational. Push safety pin back in to its original position.

## Breakaway Switch Mounted on an A-Frame

Attach breakaway switch cable securely in a straight line to the tow vehicle. Locate attachments so little "slack" is left in the cable, but enough slack to allow for turning without disengaging the pin. The cable will activate brakes the instant a trailer becomes disengaged. Brake adjustment is critical to stopping a disengaged trailer.

## Check Breakaway System and Brakes Before Each Trip

1. Disconnect 12V plug from tow vehicle.
2. Pull breakaway pin.
3. While pin is pulled, move tow vehicle forward. Brake should be on and wheels locked.
4. Replace pin and secure to tow vehicle. Do not loop over hitch ball.
5. Plug 12V connector into tow vehicle receptacle.
6. Test brakes with brake controller.

**NOTE:** When disconnecting trailer from tow vehicle, make sure to replace safety pin.

# BRAKES

## Brake Adjustment

Brakes should be adjusted (1) after the first 200 miles of operation after the brake shoes and drums have "seated", (2) at 3000 mile intervals and (3) as use and performance require. The brakes should be adjusted in the following manner:

1. Jack up trailer and secure on adequate capacity jack stands. Check that wheel and drum rotate freely.
2. Remove adjusting hole cover from adjusting slot on bottom of brake backing plate.
3. With screwdriver or standard adjusting tool, rotate the starwheel of the adjuster assembly to expand the brake shoes. Adjust the brake shoes out until the pressure of the linings against the drum makes the wheel very difficult to turn.

# TRAILER INFORMATION

**NOTE:** With drop spindle axles, a modified adjusting tool with about an 80 degree angle should be used.

4. Then rotate starwheel in opposite direction until wheel turns freely with slight lining drag.
5. Replace the adjusting hole cover and lower wheel to ground.
6. Repeat above procedure on all brakes.

***CAUTION: Never crawl under your trailer unless it is resting on properly placed jack stands.***

Do not lift or place supports on any part of the suspension system.

## Brake Cleaning & Inspection

Your trailer brakes must be inspected and serviced at yearly intervals or more often as use and performance require. Magnets and shoes must be changed when they become worn or scored thereby preventing inadequate vehicle braking.

Clean the backing plate, magnet arm, magnet and brake shoes. Make certain that all the parts removed are replaced in the same brake and drum assembly. Inspect the magnet arm for any loose or worn parts. Check shoe return springs, hold down springs and adjuster springs for stretch or deformation and replace if required.

***CAUTION: Asbestos Dust Hazard. Since some brake shoe friction materials contain asbestos, certain precautions need to be taken when servicing brakes:***

1. Avoid creating or breathing dust.
2. Avoid machining, filing or grinding the brake linings.
3. Do not use compressed air or dry brushing for cleaning. (Dust can be removed with a damp brush).

# TOWING INSTRUCTIONS

Before hitching and towing on public roads, check that the tow vehicle uses a 2-5/16" ball on a hitch rated class II minimum. Make sure keeper engages ball to secure hitch. Adjust if necessary.

## Vehicle Towing Capacity

Refer to your vehicle owner's manual for listed trailer towing capacity.

Trailer towing capacity should equal GCWR minus vehicle weight, cargo weight, people weight and vehicle fluids weight.

Check axle load rotating.

The following two rules may limit your vehicle's towing capacity and the tank fill level when towed. Determine towing capacity as described below and follow guidelines in using the **lowest** value from the 2 rules.

1. Trailer Hitch: Check rating of vehicle's trailer hitch. Class II — 3,500 lbs. Towing capacity is required.
2. Vehicle GCWR (Gross Combined Weight Rating): Towing capacity = GCWR minus vehicle weight minus cargo weight minus passenger weight. The GCWR is provided on your vehicle or in vehicle manual.

The hitch jack should always be tilted up when towing to avoid damage to caster wheel. Pin jack clamp securely.

**Always use safety chains and trailer lights**.

# TRAILER STORAGE

## Preparation

If your trailer is to be stored for an extended period of time or over the winter, it is important that the trailer be prepared properly.

1. Remove the emergency breakaway battery and store inside, out of the weather. Charge the battery at least every 90 days.
2. Jack up the trailer and place jack stands under trailer frame so that the weight will be off the tires. Never jack up or place jack stands on the axle tube or on the equalizers.
3. Lubricate mechanical moving parts that are exposed to weather, such as the hitch and suspension parts.

**NOTE:** On oil lubricated hubs the upper part of the roller bearings are not immersed in oil and are subject to potential corrosion. For maximum bearing life it is recommended that you revolve your wheels periodically (every 2-3 weeks) during periods of prolonged storage.

## Inspection Procedures After Prolonged Storage

Before removing trailer from jack stands:

1. Remove all wheels and hubs or brake drums. Note which spindle and brake that the drum was removed from so that it can be reinstalled in the same location.
2. Inspect suspension for wear.
3. Check tightness of hanger bolt, shackle bolt and U-bolt nuts per recommended torque values.
4. Check brake linings, brake drums and armature faces for excessive wear or scoring.
5. Check brake magnets with an ohmmeter. The magnets should check 3.2 ohms. If shorted or worn excessively, replace.

6. Lubricate all brake moving parts using a high temperature brake lubricant. (Lubricate or equivalent).
7. Remove any rust from braking surface and armature surface of drums with fine emery paper or crocus cloth. Protect bearings from contamination while so doing.
8. Inspect oil or grease seals for wear or nicks. Replace if necessary.
9. Lubricate hub bearings. Refer to procedure in manual.
10. Reinstall hubs and adjust bearing per instructions in manual.

## PREVENTATIVE MAINTENANCE

This trailer was produced with the best available materials and quality craftsmanship. However, you as the owner, have certain responsibilities for the correct care of the equipment. Attention to regular preventative maintenance procedures will assist in preserving the performance of your vehicle.

### Axles, Hubs and Brakes

Your trailer is equipped with Dexter Component Axles. The Dexter Owner's Manual is included with your trailer materials. Maintenance for these items is extremely important for protecting the longevity of your trailer and is important for your personal safety and the protection of others.

| Maintenance Schedule | | |
|---|---|---|
| **Tire Air Pressure** | Inflate to proper pressure | 50 psi |
| **Wheel Lugs, Bolts and Nuts** | Tighten to proper torque specifications | Every 3000 mi or 3 mo.* |
| **Wheel** | Check for damage and or out-of-round | Every 6000 mi or 6 mo.* |
| **Coupler Ball** | Check for sufficient lube. Check lock mechanism. Check for unusual wear. | Every trip |
| **Safety Chains at Hitch Ball** | Check for abrasion, distortion and general integrity of links. | Every trip |
| **Coupler** | Check for proper fastening and hitch pin in position and secure. | Every trip. |
| **Brakes** | Check for proper adjustment& operation | Every trip |
| **Breakaway Switch** | Test switch operation and connections. | Every trip |
| **Breakaway Battery** | Pull switch pin, check charge indicator light. | Every trip |
| **Load Distribution** | Check load distribution and security. | Every trip |
| **Leveling Jacks** | Check fastenings, lube. | Every trip |
| **Welds** | Check all weld beads for cracks or separations. | Every 6000 mi. or 6 mo. |
| **Hinges** | Grease zerks with a lithium complex grease. | Every 3000 mi. or 3 mo. |
| **Tie Down Devices** | Check for fracturing, distortion and improper anchoring. | Every 3000 mi. or 3 mo. |
| **Electrical: Lights and Signals** | Check to make sure all are working properly. Replace burned out bulbs. | Every trip |

* Check lug nuts for tightness before initial trip, then at 10 miles, 25 miles and 50 miles. Recheck at least every 3 months or 3000 miles.

# IMPORTANT PRESSURE WASHER SAFETY INFORMATION

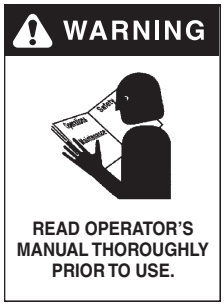


***CAUTION: To reduce the risk of injury, read operating instructions carefully before using.***

1. Read the owner's manual thoroughly. Failure to follow instructions could cause malfunction of the machine and result in death, serious body injury and/or property damage.
2. Know how to stop the machine and bleed pressure quickly. Be thoroughly familiar with the controls.
3. Stay alert— watch what you are doing.


***WARNING: Keep wand, hose and water spray away from electric wiring or fatal electric shock may result.***

4. All installations must comply with local codes. Contact your electrician, plumber, utility company or the selling distributor for specific details.


***WARNING: This machine exceeds 85 db appropriate ear protection must be worn.***


***WARNING: High pressure spray can cause paint chips or other particles to become airborne and fly at high speeds. To avoid personal injury, eye, hand and foot safety devices must be worn.***

5. Eye, hand, and foot protection must be worn when using this equipment.
6. Keep operating area clear of all persons.


***WARNING: Flammable liquids can crate fumes which can ignite, causing property damage or severe injury.***

***WARNING: Risk of explosion — Operate only where open flame or torch is permitted.***


***WARNING: Risk of fire— Do not add fuel when the product is operating or still hot.***

***WARNING: Do not use gasoline crankcase draining or oil containing gasoline, solvents or alcohol. Doing so will result in fire and / or explosion.***

***WARNING: Risk of fire— Do not Spray flammable liquids.***

7. Allow engine to cool for 1-2 minutes before refueling. If any fuel is spilled, make sure the area is dry before testing the spark plug or starting the engine. ( Fire and/or explosion may occur if this is not done.)
   Gasoline engines on mobile or portable equipment shall be refueled:
   a. Outdoors;
   b. With the engine on the equipment stopped;
   c. With no source of ignition within 10 feet of the dispensing point; and
   d. With an allowance made for expansion of fuel should the equipment be exposed to a higher ambient temperature.

In an overfilling situation, additional precautions are necessary to ensure that the situation is handled in a safe manner.

***WARNING: Risk of injury. Disconnect battery ground terminal before servicing.***

8. When in use, do not place machine near flammable objects as the engine is hot.
9. Oil burning appliances shall be installed only in locations where combustible dusts and flammable gases or vapors are not present. Do not store or use gasoline near this machine.
10. Use No. 1 or No. 2 heating oil (ASTM D306) only. **NEVER** use gasoline in your fuel oil tank. Gasoline is more combustible than fuel oil and could result in a serious explosion. **NEVER** use crankcase or waste oil in your burner. Fuel unit malfunction could result from contamination.
11. Do not confuse gasoline and fuel oil tanks. Keep proper fuel in proper tank.


***WARNING: Risk of injury. Hot surfaces can cause burns. Use only designated gripping areas of gun and wand. Do not place hands or feet on non-insulated areas of the pressure washer.***

# IMPORTANT PRESSURE WASHER SAFETY INFORMATION

12.Transport/Repair with fuel tank EMPTY or with fuel shut-off valve OFF.


***CAUTION: Hot discharge fluid. Do not touch or direct discharge stream at persons.***

***WARNING: This machine produces hot water and must have insulated components attached to protect the operator.***

13.To reduce the risk of injury, close supervision is necessary when a machine is used near children. Do not allow children to operate the pressure washer. **This machine must be attended during operation.**


***WARNING: Grip cleaning wand securely with both hands before starting. Failure to do this could result in injury from a whipping wand.***

14.Never make adjustments on machine while in operation.

15. Be certain all quick coupler fittings are secured before using pressure washer.


***WARNING: High pressure developed by these machines will cause personal injury or equipment damage. Keep clear of nozzle. Use caution when operating. Do not direct discharge stream at people, or severe injury or death will result.***

***WARNING: Protect machine from freezing.***


16. To keep machine in best operating conditions, it is important you protect machine from freezing. Failure to protect machine from freezing could cause malfunction of the machine and result in death, serious bodily injury, and/or property damage. Follow storage instructions specified in this manual.

17.Inlet water must be clean fresh water and no hotter then 90°F.


***WARNING: Risk of asphyxiation. Use this product only in a well ventilated area.***

18. Avoid installing machines in small areas or near exhaust fans. Adequate oxygen is needed for combustion or dangerous carbon monoxide will result.

19.Manufacturer will not be liable for any changes made to our standard machines or any components not purchased from us.

20.The best insurance against an accident is precaution and knowledge of the machine.


***WARNING: Be extremely careful when using a ladder, scaffolding or any other relatively unstable location. The cleaning area should have adequate slopes and drainage to reduce the possibility of a fall due to slippery surfaces.***

21.Do not allow acids, caustic or abrasive fluids to pass through the pump.

22. Never run pump dry or leave spray gun closed longer than 1-2 minutes.

23. Machines with shut-off spray gun should not be operated with the spray gun in the off position for extensive periods of time as this may cause damage to the pump.

24. Protect discharge hose from vehicle traffic and sharp objects. Inspect condition of high pressure hose before using or bodily injury may result.

25. Before disconnecting discharge hose from water outlet, turn burner off and open spray gun to allow water to cool below 100° before stopping the machine. Then open the spray gun to relieve pressure. Failure to properly cool down or maintain the heating coil may result in a steam explosion.

26. Do not overreach or stand on unstable support. Keep good footing and balance at all times.

27. Do not operate this machine when fatigued or under the influence of alcohol, prescription medications, or drugs.

28. In oil burning models, use only kerosene, No. 1 home heating fuel, or diesel. If diesel is used, add a soot remover to every tankful.

**Follow the maintenance instructions specified in the manual.**

# SAFETY INFORMATION & ASSEMBLY AND OPERATION

## Batteries

Charge batteries in an open, well- ventilated area, away from sparks. Unplug battery charger before connecting or disconnecting from battery. Wear protective clothing and use insulated tools.

## Type of Fuel

Use only clean, fresh, unleaded regular grade gasoline to run engine.

***CAUTION: DO NOT MIX OIL WITH GASOLINE. USE ONLY NO. 1 OR NO. 2 HEATING OIL (ASTM D306) FOR BURNER.***

## Type and Quality of Oil

Engine oils with API Service Classifications: SF, SG, SH or SJ are recommended.

**NOTE:** Using multi-grade oils (5W-20, 10W-30 and 10W-40) will increase oil consumption. Check oil level more frequently when using them.

## Handling Waste Products and Chemicals

Waste products, such as, used oil, fuel, coolant, brake fluid, batteries, can harm the environment and people.

Do not use beverage containers for waste fluids someone may drink from them.

## Using a Spark Arrestor

The engine in this machine is not equipped with a spark arrestor muffler. It is a violation of California Public Resource Code Section 4442 to use or operate this engine on or near any forest-covered, brush-covered or grass-covered land unless the exhaust system is equipped with a spark arrestor meeting applicable local or state laws. Other states or federal areas may have similar laws.

A spark arrestor for your machine maybe available from your authorized dealer. An installed spark arrestor must be maintained and in good working order.

# PRE-OPERATION CHECK

- Pump oil (SAE 10W-40 non-detergent oil)
- Gear reduction (90W gear lube)
- Cold clean fresh water supply (6 GPM • 3/4" (15.875 mm) • 20 PSI).
- Hose, nozzle
- Fuel (unleaded 86 or higher octane)
- Check engine oil (oil level full)

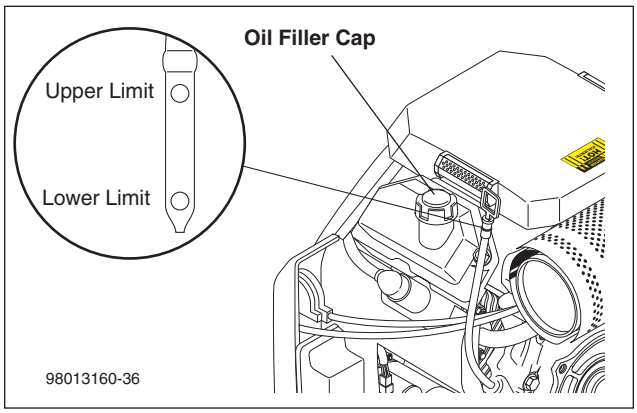


# ENGINE OIL

Oil is a major factor affecting performance and service life. Use 4-stroke automotive detergent oil.

## Recommended Oil

Use 4-stroke motor oil that meets or exceeds the requirements for API service category SJ or later (or equivalent). Always ckeck the API sevice on the oil container to be sure it includes the letters SJ or later (or equivalent).

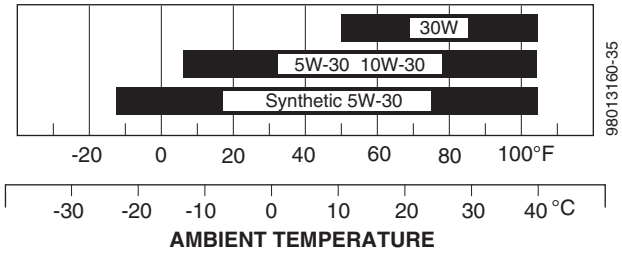


SAE 10W-30 or 5W-30 is recommended for general use. Use a full synthetic 5W-30 for starting/operating temperatures 5°F (-15°C) and -13°F (-25°C). Other viscosities shown in the chart may be used when average temperature in your area is within indicated range.

## SETUP PROCEDURES

These machines are meant to be used at or near the working area and under operator supervision. If machine must be located out of sight of the operator, special controls may be required for proper machine operation and operator safety.

Always locate the trailer in the driest and safest place possible. Avoid high traffic areas and use flashers and safety cones. Position the trailer so that the hose can be pulled directly off of the reel for use.

Avoid areas where water can be sprayed at machine.

Locate the equipment on a solid level area with slopes for drainage. When operating upon unlevel ground, position trailer with hitch end at the downhill side.

***WARNING: Do not unhitch or operate trailer unhitched on unlevel ground.***

Before using the trailer, make sure there are no impurities in the incoming water supply. Turn the water source on for at least 15 seconds, to remove any possible debris in the water before connecting hose to water supply.

The inlet screen located inside the filter should be cleaned before each use. Filter is located behind valve panel and can be accessed from underneath or by removing small access panel in control cabinet. To clean the inlet screen, unscrew cap beneath the filter, remove the screen and rinse thoroughly with water. Then replace screen.

# COMPONENT IDENTIFICATION

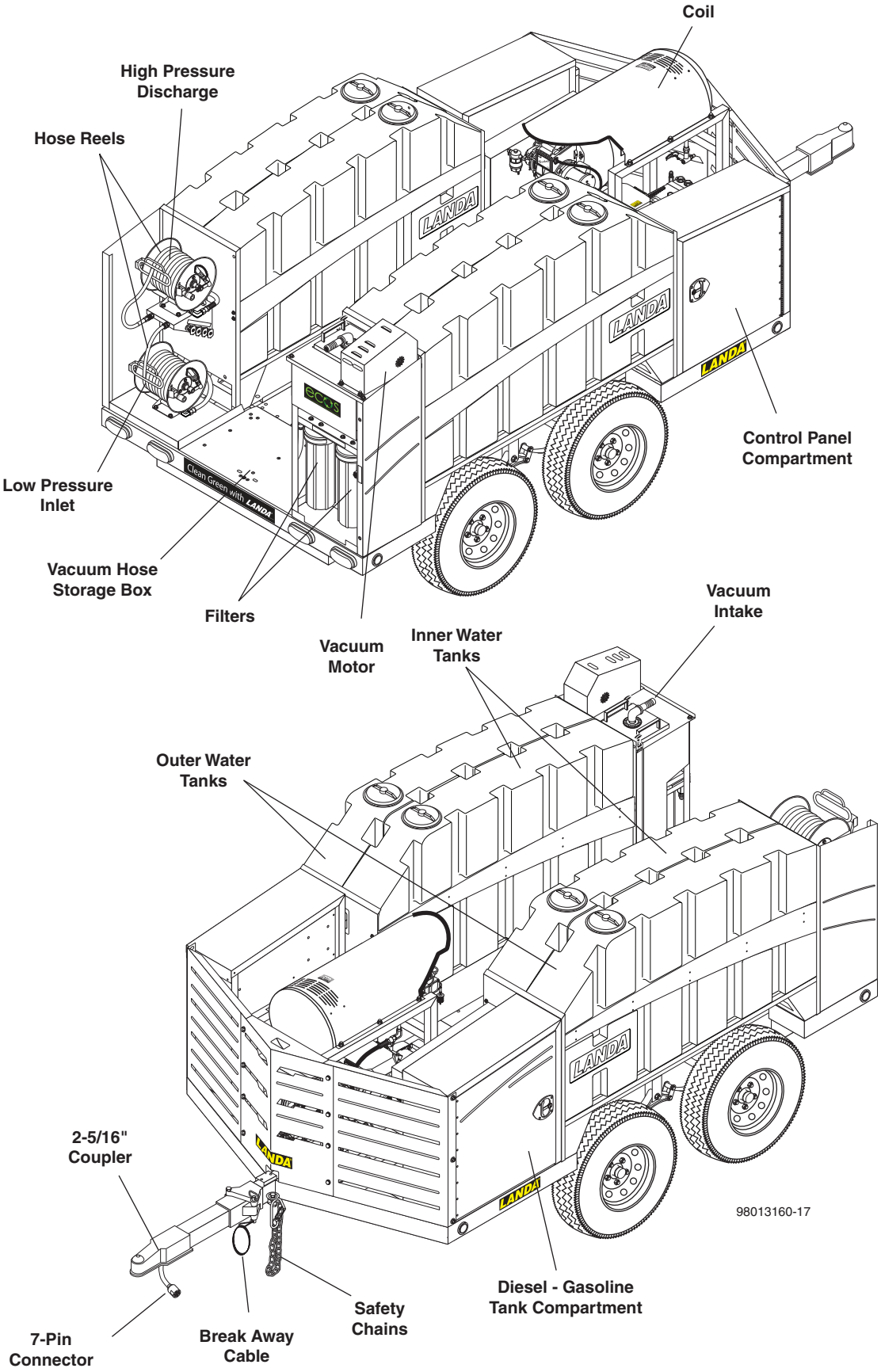

# ASSEMBLY INSTRUCTIONS

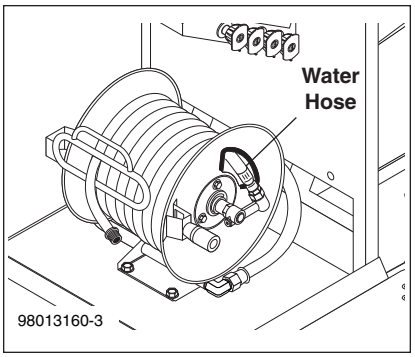


**STEP 1:** Install water hose (5/8" minimum) to lower hose reel. Connect lose end of water hose to water supply. Minimum flow should be 5 gpm.

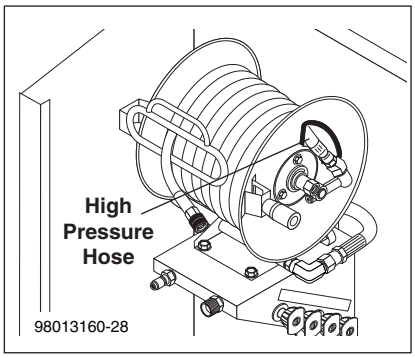


**STEP 2:** Install high-pressure hose to upper high-pressure hose reel.

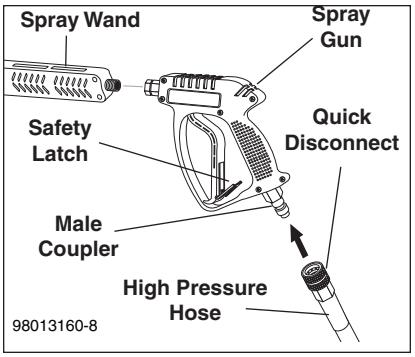


**STEP 3:** Attach variable wand to spray gun, use teflon tape on threads to prevent leakage. Attach male coupler to the inlet on gun using teflon tape on threads. Attach spray gun assembly to quick disconnect of high pressure hose.

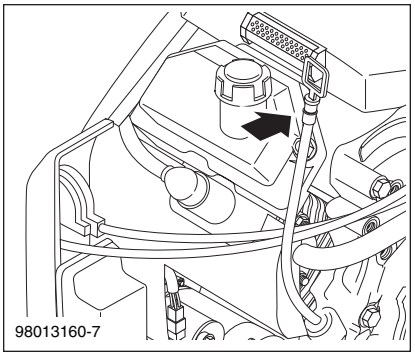


**STEP 4:** Check engine and pump oil level by removing oil dipstick, making sure oil is on proper indicator marking. Oil should be visible one half way up sight glass (SAE 30W non-detergent).

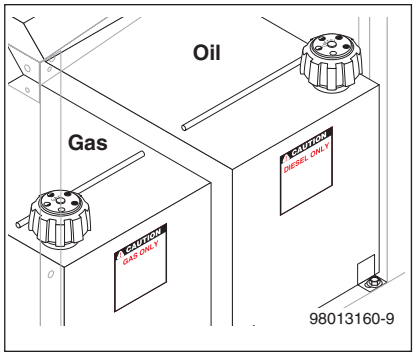


**STEP 5:** Fuel tanks are located on the driver side cabinet. Fill red tank with gasoline. Fill the black tank with fuel oil (diesel). DO NOT confuse gasoline and oil tanks. Keep proper fuel in proper tanks.

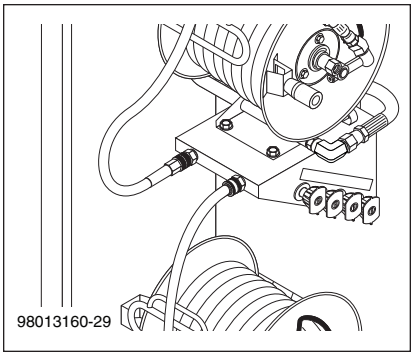


To prevent injury or damage when transporting trailer, attach the loose ends of both hoses to the fittings located on the base of the upper reel. Wind reels to remove any excess hose and lock reels in place.

# BATTERY INSTALLATION

Due to Federal Regulations concerning shipment of corrosive chemicals, batteries are not shipped with this machine.


Local purchase of battery will be the responsibility of the owner. Automotive type 12 Volt Group 24 battery is recommended for placement within the weather resistant box. Follow safety and installation instructions furnished with the battery.

Red Cable is attached to battery (+) positive terminal, black cable is connected to battery (-) negative terminal.

***Important: Remove the battery when trailer in not in use to prevent the battery from draining.***

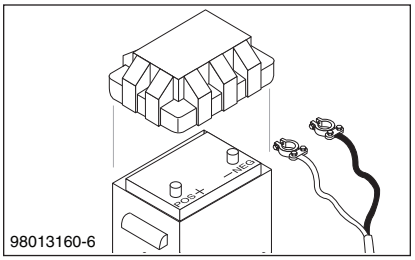


**Install proper battery making sure that the red cable is attached to the positive terminal Use a 12v Group 24 battery.**

# PRESSURE WASHER INSTRUCTIONS

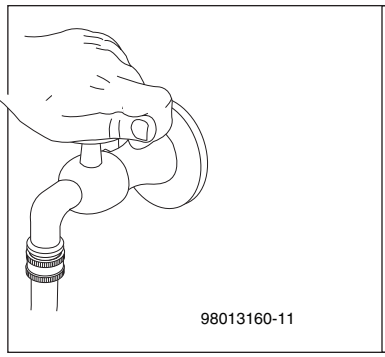


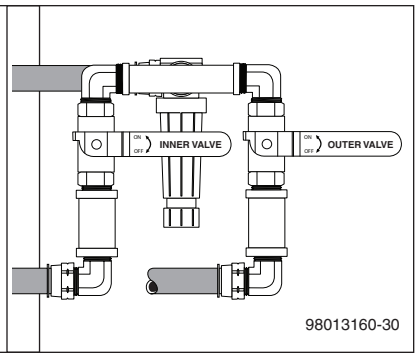


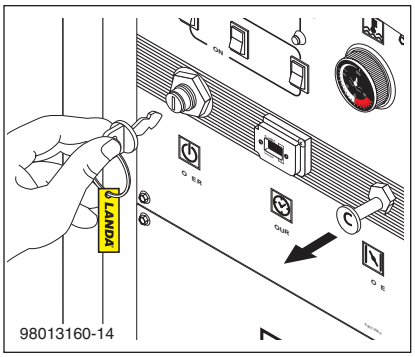


**STEP 1:** Read safety, installation and preventative maintenance instructions before starting machine. Fill the water tanks from a clean water source. If filling from a hydrant, flush out any rust before connecting water supply. The water supply may remain connected for further filling. Tanks can also be filled by removing lid and feeding water directly into tanks.

***CAUTION: To prevent damage to the pump, incoming water temperature must not exceed 140° F.***

**Step 2:** To fill the two outer tanks, turn the inner tank valve to the "OFF" position and the outer tank valve to the "ON" position. To fill all four tanks turn the two bottom valves to the "ON" position. The two outer tanks are linked together with a 1" line to distribute the weight of the water. The two inner tanks are also linked together

**STEP 3:** Read engine manual provided and pull choke. Pull spray gun trigger to relieve pressure. Turn the engine switch to the START position and hold until the engine starts.

**NOTE:** Do not engage the electric starter for more than five seconds at a time. If the engine fails to start, release the switch, pull spray gun trigger and wait ten seconds before operating the starter again. Once the engine starts, push the choke in.

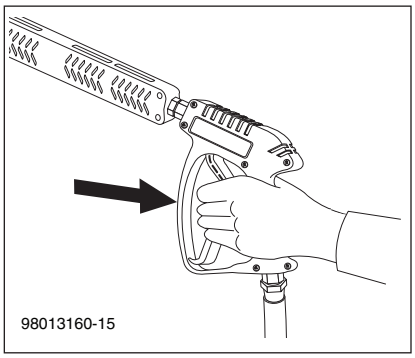


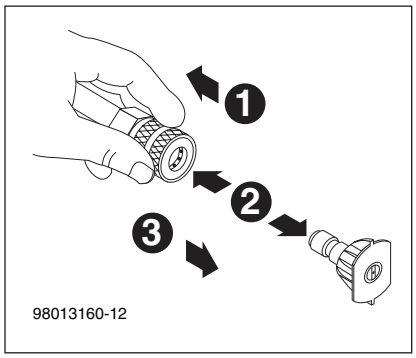


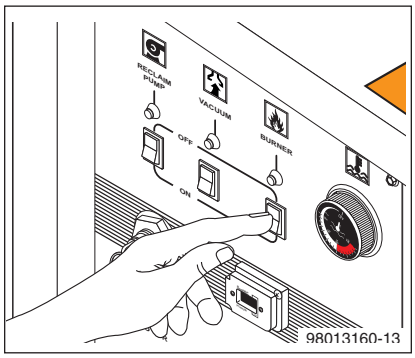


**STEP 4:** With the spray nozzle pointed away from you or anybody else, press the trigger on the spray gun to obtain pressurized cold water spray.

**STEP 5:** Pull wand coupler collar back and insert desired pressure nozzle into wand coupler. Then secure by pushing coupler collar forward.

***CAUTION: Never replace nozzles without engaging the safety latch on the spray gun trigger.***

**STEP 6:** For hot water, turn the burner switch to ON and set the thermostat knob to the desired temperature. When a steady stream of water flows out of the spray gun the burner will light automatically.

**NOTE:** Do not start machine with burner switch on. The green light will be illuminated when the burner switch is in the on position.

# DETERGENT INSTRUCTIONS

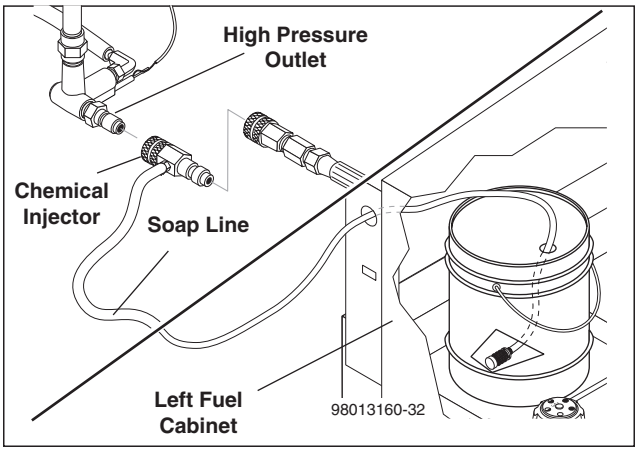


**STEP 1:** Connect the downstream chemical injector to the high pressure outlet. Route the soap line into the left fuel cabinet and into detergent bucket. (buckets not provided).

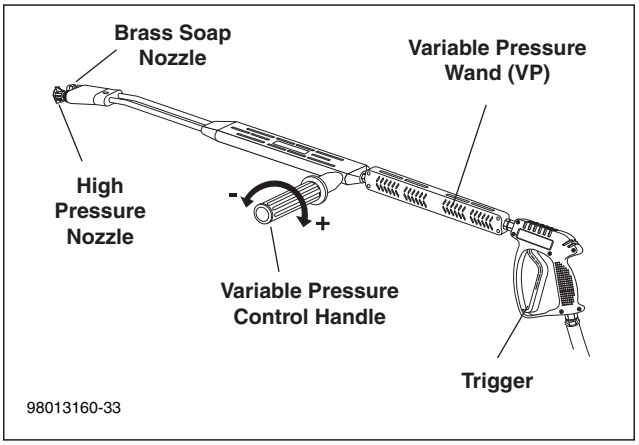


**STEP 2:** Selection of high or low pressure is accompanied by turning the handle.
**NOTE:** High pressure nozzle must be inserted at the wand to obtain high pressure. Variable pressure control wand handle must be turned clockwise to enable water to flow out of the high pressure nozzle.
To apply detergent, place detergent pick-up tube into a container of detergent and turn the detergent valve handle on the wand counterclockwise.

# HEAT EXCHANGER

**HEAT EXCHANGER:**
The incoming water temperature is raised for better burner efficiency by the use of the systems heat exchanger. The heat exchanger is made up of three stages, these stages are engine exhausts stage, mixing stage and exit stage. The hot engine exhaust is sent to the exchanger box where it passes thru the heat transfer core. The preheated water is then sent to the high pressure pump and exhaust gases then exit the unit.

***WARNING: The heat exchanger core becomes extremely hot and should not be touched while the machine is in operation. Allow machine to cool down completely before attempting to service this area. Always wear hearing protection and proper personal protection equipment when operating unit***

**HEAT EXCHANGER SYSTEM MAINTENANCE:**
The heat exchange system in your units transfers energy between the heat of the power plant to the water supply of the unit. The heat transfer of this system is highly dependent on the surface area contact in the heat exchanger cores located in the heat exchanger box. The surface area amount is adversely minimized when the supplied water is not softened to recommended levels (exceeds 3-1/2 grains). Hard water will result in scaling on the inside walls of the heat exchanger tubes. It is recommended that you use a dealer-approved water softener to avoid premature heat exchanger core failure. Contact your local dealer for advice on the water hardness levels in your area.
Additionally, the heat exchanger tubes are very sensitive to freezing conditions. **The following is recommended during the cold weather season.**
When unit is not in use, always park it in a heated building.
While in operation, avoid long shutdowns as the unit provides heat while running. Shut it down just prior to leaving for the next job.
If a heated building is not available, we recommend that you winterize the unit with anti-freeze.

***WARNING: When disposing of anti-freeze, observe local laws and regulations. Do not drain onto ground or into storm drainage systems.***

**NOTE:** Inspect and clean exchanger core and box every 500 hours.
**NOTE:** The heat exchanger will produce water condensation discharge at times during normal operation. DO NOT confuse this with a leak.

# VACUUM OPERATING INSTRUCTIONS

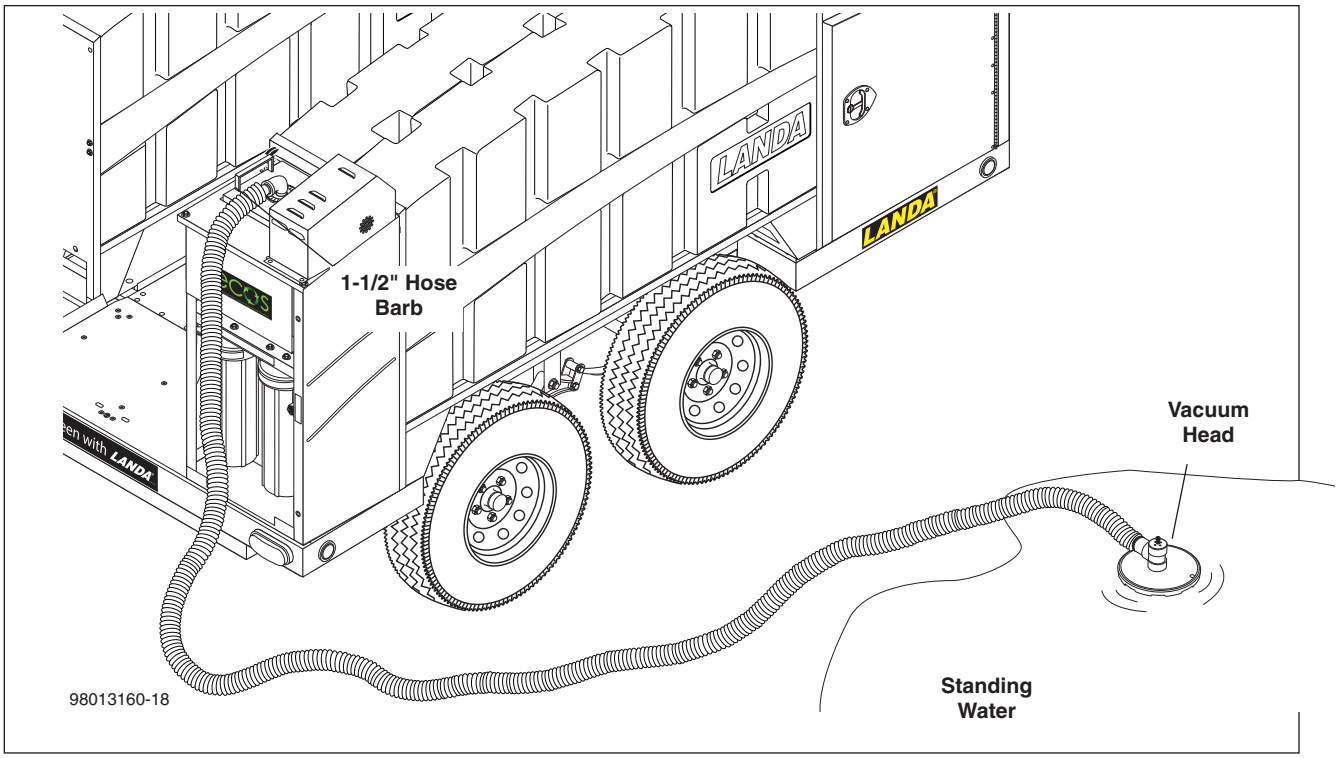


**STEP 1:** Keep the working area free of rubbish. Attach the vacuum hose to the 1-1/2" hose barb located in the rear of the trailer. Attach the vacuum head to the other end of the vacuum hose. Locate the vacuum head at the lowest area of standing water. If washing, set up a damming or a containment system. Start engine as outlined in "Pressure Washing Instructions".

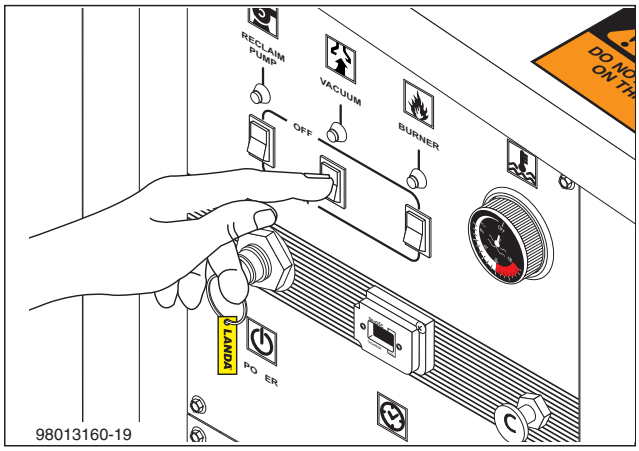


**STEP 2:** To reclaim water, press the Vacuum Motor switch located in the control cabinet to the "ON" position. The vacuum system will draw water into the 40 gallon holding tank and will automatically stop when the tank is full.

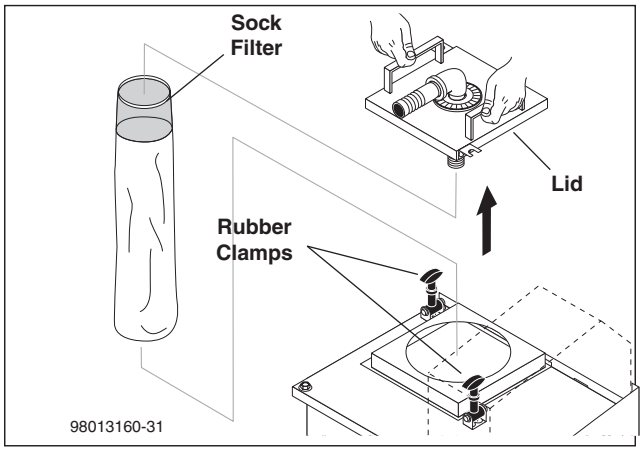


**STEP 3:** Located in the vacuum tank is the large debris sock filter. To clean the sock filter turn off vacuum motor and then remove the vacuum hose and the two rubber clamps located on the top of vacuum inlet. Grasp the two handles and lift the lid vertically until the sock filter clears the opening. Remove the filter and dispose of the contents per local regulations. Replace and secure the bag filter, lid and vacuum hose.

# VACUUM OPERATING INSTRUCTIONS

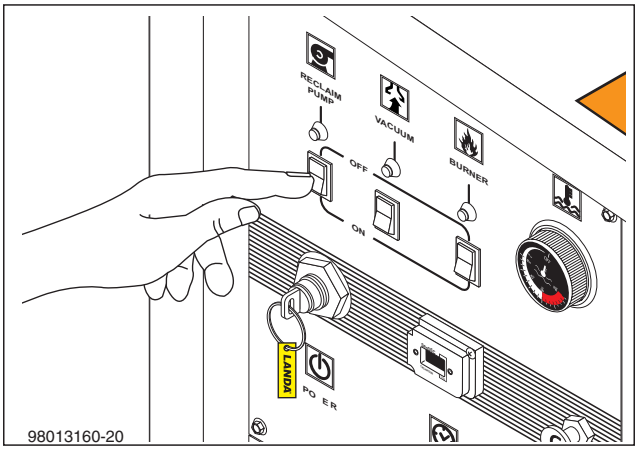


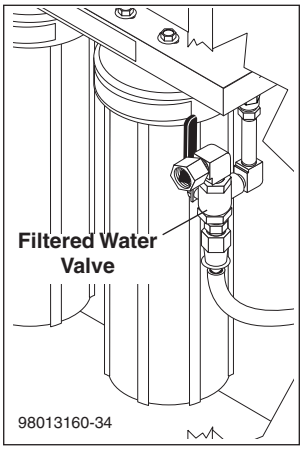


**STEP 4:** To filter the finer particulates, push the reclaim pump switch to the "ON" position. The reclaim pump will push the water through the two filter housing. On the outlet end of the filters is the filtered water valve. In the vertical position the filtered water is routed back to the inner holding tanks. In the horizontal position the filter water can be discharged as needed.

***WARNING: When disposing of reclaimed water, check with local state and federal laws before disposal.***

# FILTER REPLACEMENT

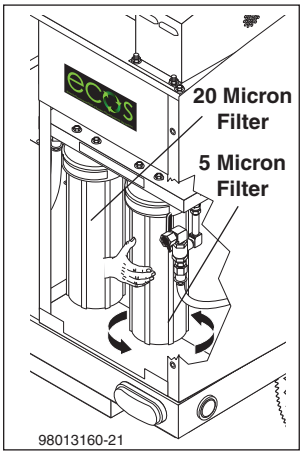


**STEP 1:** To remove filters, turn filter housing counterclockwise.

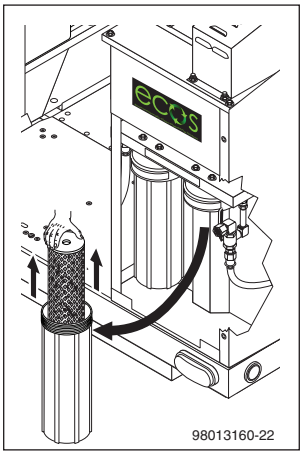


**STEP 2:** Remove the used filter from the filter housing, be sure not to lose the black o-ring.

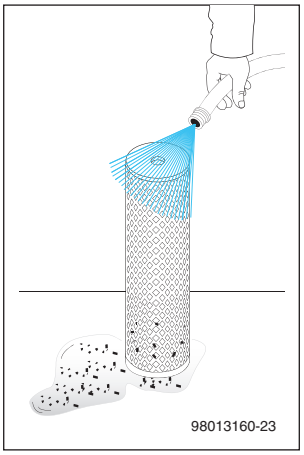


**STEP 3:** Spray gently with clean running water. Do not use soap or other additives which may cause damage on the filter.

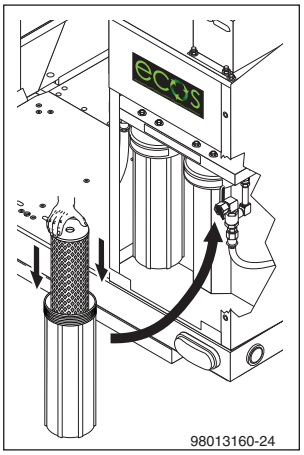


**STEP 4:** Place the filter back in the filter housing, make sure o-ring is in place, put it back in position and turn clockwise.

# VALVE OPERATION

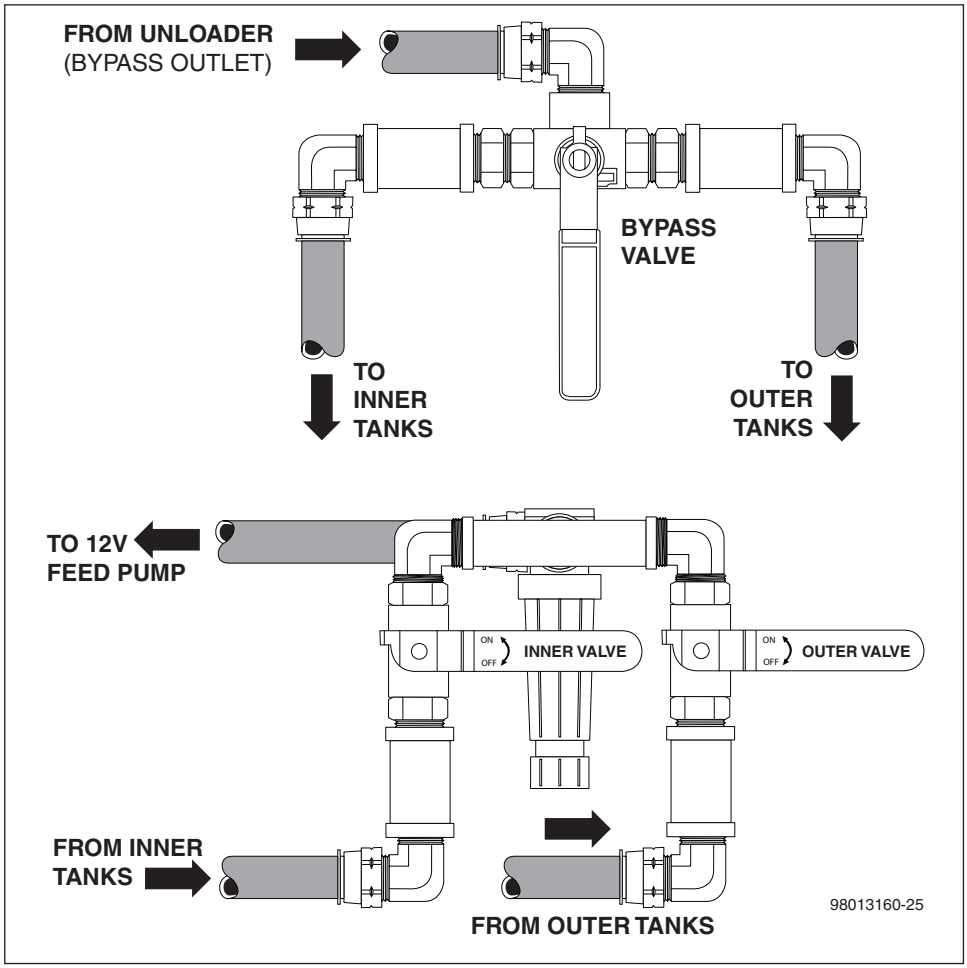


With all tanks full, you have the option of drawing water from the two outer tanks, the two inner tanks or all four tanks.

**OPTION 1:** To draw water from the outer tanks set the outer tank valve to the "ON" position and the inner tank valve to the "Off" position. Set the bypass valve to the outer tank position.

**OPTION 2:** To draw water from the inner tanks set the outer tank valve to the "OFF" position and the inner tank valve to the "ON" position. Set the Bypass valve to the inner tank position.

**OPTION 3:** To draw water from all the tanks set the outer and inner tank valves to the "ON" position. The bypass valve can be in the inner or outer tank position.

# EXPLODED VIEW FOLD AWAY TONGUE

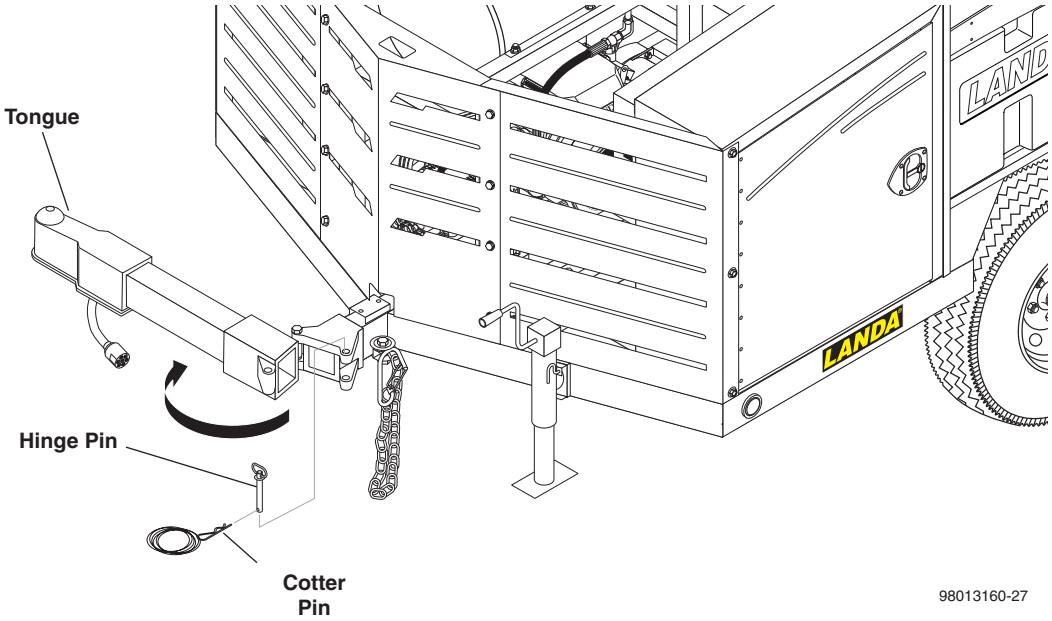


# FOLD AWAY TONGUE INSTRUCTIONS

To swing the tongue away for storage pull the cotter pin and remove the hinge pin. Rotate the hinge to the side. Store the hinge pin and cotter pin in the hinge.

***WARNING:*** *Before towing trailer make sure that the fold-away hinge is locked into position with the hinge pin and cotter pin.*

# VACUUM TANK DRAIN INSTRUCTIONS

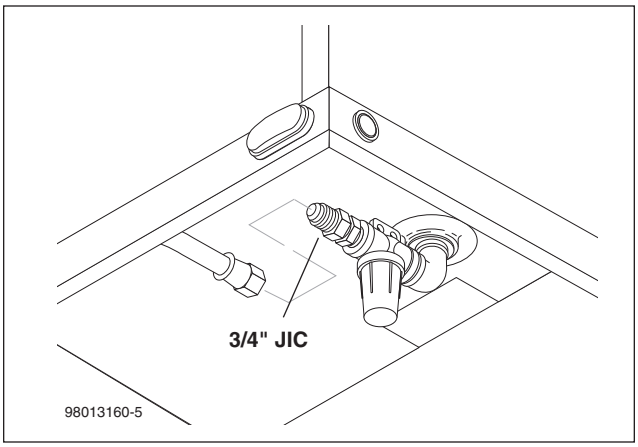


To drain vacuum tank disconnect the 3/4" JIC on bottom of tank. Re-connect hose when tank is empty.

# PRESSURE WASHER TROUBLESHOOTING

These troubleshooting procedures cover pump malfunctions, delivery problems and charge system malfunction.

***Warning: Before attempting any repairs or maintenance, make sure machine is shut off.***

| PROBLEM | POSSIBLE CAUSE | REPAIR |
|---|---|---|
| **ENGINE WILL NOT START** | Low oil level | Fill to proper levels. |
| | Low water level in 200 gallon tank | Fill to 1/2 full minimum. |
| | No fuel | Fill fuel tank. |
| **LOW PRESSURE** | Worn or oversized nozzle | Replace worn nozzle. Check nozzle size. |
| | Clogged water supply hose, inlet strainer, or kinked hose | Clean or replace strainers. |
| | Worn or damaged piston cups | Replace piston cups. |
| | Worn or damaged inlet or discharge valve | Replace worn valve poppets or valve springs. |
| | Dirt or foreign particles in valve assembly | Remove any dirt particles. |
| | Air leak in inlet plumbing or inaccurate gauge | Locate air leak. Re-seal connection or replace damaged gauge. |
| | Cavitation | Check suction lines on inlet of pump for restrictions. |
| | Unloader | Check for proper operation |
| | Worn or plugged relief valve on pump | Clean, reset and replace worn parts. |
| | Worn or damaged hose | Repair/replace hose. |
| | Broken valve spring | Replace spring. |
| | Pulse valve on | Turn off pulse valve. |
| | Improper adjustment of unloader | Adjust as necessary. |
| **ROUGH OPERATION WITH LOSS OF PRESSURE** | Restricted inlet plumbing or air leak in inlet plumbing | Replace clogged inlet fittings. Check supply hose and ensure adequate water supply. |
| | Damaged piston, cup or pump valve | Replace any damaged pump parts and clean out any foreign particles. |
| | Clogged nozzles | Clean or replace nozzles. |
| **WATER LEAKAGE AT INTAKE MANIFOLD OR CRANKCASE** | Worn manifold seals, pistons or O-rings. Or, condensation inside crankcase | Replace seals, sleeves or O-rings. Change oil at regular intervals. |
| | Inadequate water supply to pump creating a vacuum lock | Ensure adequate tap water supply. Clear inlet filter. |
| **SHORT PISTON CUP LIFE** | Scored cylinders from pumping acids | Replace cylinders. DO NOT PUMP ACID SOLUTIONS. For acid application, ask your dealer for a pump saver injector. |
| | Abrasive particles in fluid being pumped | Replace water and detergent strainers if damaged or missing. Install additional filter if fine abrasives are still evident. |
| | Operator(s) running pump without water supply | DO NOT ALLOW WASHER TO RUN WITHOUT PROPER WATER SUPPLY. |
| | Hot water in pump | Do not run in bypass for more than 5 minutes. Do not let water supply exceed 140°F (60°C). |

# PRESSURE WASHER TROUBLESHOOTING

| PROBLEM | POSSIBLE CAUSE | REPAIR |
|---|---|---|
| **WASHER FAILS TO DRAW DETERGENT** | Detergent metering valve closed or valve clogged or defective | Open detergent metering valve, following procedure in operating instructions. |
| | Back pressure in hose (when using additional lengths of pressure hose) | Contact dealer for proper injector size when adding lengths of hose. |
| | Back pressure in pressure hose (when using dual lance wand) | Use proper size flood nozzle in dual lance wand (refer to parts breakdown). |
| | Suction tube not below liquid surface | Completely submerge suction tube and strainer in detergent solution. |
| | Clogged or damaged suction strainer | Clean or replace strainer. |
| **DETERGENT SOLUTION TOO WEAK** | Clogged detergent strainer | Clean or replace strainer. |
| | Air leak in detergent suction tube or inlet plumbing | Find air leak and clean or replace parts as necessary. |
| **DETERGENT SOLUTION TOO CONCENTRATED** | Original detergent too concentrated | Dilute product as necessary to achieve proper concentration. |
| **DETERGENT IN RINSE CYCLE** | Dual lance wand or adjustable nozzle holder in open position or chemical metering valve open | Close dual lance wand adjustable lance holder to achieve high pressure. Close detergent metering valve. |
| **DILUTION OF DETERGENT CONCENTRATE DURING CYCLE** | Worn or defective internal check valve | Repair or replace check valve or injector parts as necessary. |
| | Defective check valve in detergent tank | Replace parts as necessary. |
| **NOISY OPERATION** | Worn bearings | Replace bearings, refill crankcase oil with recommended lubricant. |
| | Cavitation | Check inlet lines for restrictions and/or proper sizing. |
| **PUMP NOISY** | Low oil level | Add oil |
| | Worn or dirty valves | Replace or clean. |
| | Bad bearings | Inspect bearings; replace as required |
| **IRREGULAR SPRAY PATTERN** | Worn or partially clogged nozzle | Clean or replace nozzles. |
| **EXCESSIVE WEAR** | Worn or loose bearings | Replace bearings. Check bearing seals, spacers and retainers. Replace any worn parts. |
| **HIGH CRANKCASE TEMPERATURE** | Wrong grade of oil | USE SAE 90 Gear Oil. |
| | Improper amount of oil in crankcase | Adjust oil level to proper amount. |
| **OIL LEAKS** | Worn pistons and/or leaking crank seals, crankcase cover seal or drain plugs | Replace seals, sleeves or O-Rings. |

# PRESSURE WASHER TROUBLESHOOTING

## Unloader Valve Malfunction

| PROBLEM | POSSIBLE CAUSE | REPAIR |
|---|---|---|
| **UNLOADER CYCLES** | Fitting leaking downstream | Tighten/replace fitting. |
| | Piston or valve spring broken or worn | Replace parts as necessary. |
| | Clogged nozzle | Clean or replace. |
| **FLUID LEAKING FROM BODY** | O-ring worn or cut | Replace part as necessary |
| **UNLOADER WILL NOT COME TO PRESSURE** | Foreign particle in valve | Replace or clean. |
| | Nozzle worn or wrong size | Replace part as necessary. |
| | Piston or valve worn | Replace part as necessary. |
| **EXTREME PRESSURE SPIKES** | Adjusting nut turned completely into unloader | Back off adjusting nut. |
| | Clogged nozzle | Clean or replace. |

## PREVENTATIVE MAINTENANCE

Check to see that water pump is properly lubricated.

- Follow winterizing instructions to prevent freeze damage to pump and coils.
- Always neutralize and flush detergent from system after use.
- If water is known to be high in mineral content, use a water softener on your water system, or de-scale as needed.
- Do not allow acidic, caustic or abrasive fluids to be pumped through system.
- Always use high grade quality cleaning products.
- Never run pump dry for extended periods of time.
- Use clean diesel fuel. Clean or replace fuel filter every 100 hours of operation. Avoid water contaminated fuel as it will damage the fuel pump.
- If machine is operated with smoky or eye burning exhaust, coils soot up and prevent water from reaching maximum operating temperature. (See section on Burner Adjustments.)
- Never allow water to be sprayed on or near the engine or burner assembly or any electrical component.
- Periodically delime coils per instructions.
- Check to see that engine is properly lubricated.

It is advisable, periodically, to visually inspect the burner. Check air inlet to make sure it is not clogged or blocked. Wipe off any oil spills and keep this equipment clean and dry.

The flow of combustion and ventilating air to the burner must not be blocked or obstructed in any manner.

The area around the pressure washer should be kept clean and free of combustible materials, gasoline and other flammable vapors and liquids.

### Unloader Valves

Unloader valves are preset and tested at the factory before shipping. Tampering with the factory setting may cause personal injury and/or property damage, and will void the manufacturer's warranty.

### Winterizing Procedure

Damage due to freezing is not covered by warranty. Adhere to the following cold weather procedures whenever the washer must be stored or operated outdoors under freezing conditions.

### Trailer Winterization

***To protect your machine from severe damage caused by water freezing inside the components, it is important to winterize it whenever it is subjected to freezing temperatures.***

***The best way to protect the system is to keep it out of the cold. Barring that, the next best way is to flush the system with antifreeze. To do so, follow these steps to properly operate the anti-freeze protection system. This system is designed to protect your equipment during cold weather conditions of 32°F or below. Your ECOS trailer comes with a factory installed winterization system.***

***Be sure to wear safety glasses and gloves when winterizing system.***

**Inner And Outer Water Tanks**

- After operation, turn engine off, drain all yellow tanks by removing debris filter cap located behind control panel and turn both tank valves to the open position. If there is still water in the tank, lower the front end of the trailer with the jack to completely drain the tanks. Use a wet-dry vacuum to suck the remaining water from the drain ports at the bottom of the tanks.
- Once tanks are drained, replace debris filter cap and turn both tank valves to the off position.

**Coil, Heat Exchanger, Inlet Feed Pump, and High Pressure Hose**

- Relieve any pressure in wand and hose. Close both tank valves located in the control cabinet. Keep gun and wand attached to high pressure hose and remove high pressure nozzle.
- Pour a minimum of a 5 gallons of environmentally safe antifreeze mixture into two 5 gallon buckets. (Determine what is the best mix ratio for your environment).
- Remove the plug on the antifreeze inlet line located in the control panel cabinet. Place open line into antifreeze mixture. Have a second 5 gallon bucket ready to collect antifreeze recycling through system.
- While holding open the gun trigger, start the engine to draw the antifreeze solution into the system. Keep the gun open. Once antifreeze can be seen coming out of the wand, release the gun trigger and allow the system to run in bypass for 15 seconds. While in bypass, switch the bypass valve on the control panel to the other tank and continue to run in bypass for another 15 seconds. Turn the key to the OFF position.
- Remove the inlet feed line from the antifreeze mixture and replace the plug.

# MAINTENANCE & SERVICE

- Keep the gun and wand attached to the hose to prevent antifreeze mixture from draining from the unit.

**Vacuum Tank Assembly**

- Start by turning on the filter pump until the float at the bottom of the vacuum tank turns off the pump. Manually pull the normally open float (lower float located inside vacuum tank) to the up position so the pump starts and removes any remaining water from the system.
- Pour 1 gallon of environmentally safe antifreeze mix into vacuum tank and disconnect ¾" JIC below the pressure gauge on the inlet side of the filter assembly. Manually pull the lower float to the up position so the pump starts and fills the pump assembly and hoses with antifreeze mix. Once you see antifreeze start to flow from the ¾" hose, drop the float to the off position and reconnect ¾" JIC.
- Remove the two filter canisters and drain any water. (Take care not to lose O-rings) Remove the filters and air dry for storage. Disconnect the ¾" JIC on the right hand side of the filter assembly and use air to purge the water out of the return line to the inner water tank. Reconnect when you are finished.

**Use the following steps to return to normal operation after winterizing your equipment.**

- Open the tanks valves and remove high pressure nozzle from wand.
- Place the wand end into a 5 gallon bucket and pull gun trigger, be careful of backsplash.
- With the gun in hand and the trigger pulled, turn the start key to the auxiliary position.
- Run the pump until there is clear water running out of wand end.
- Turn feed pump off and release wand. Replace high pressure nozzle in wand.
- Comply with local state and federal laws when using and disposing of antifreeze.

**The machine is now ready for normal use.**

## High Limit Hot Water Thermostat

For safety, each machine is equipped with a temperature sensitive high limit control switch. In the event that the water should exceed its operating temperature, the high limit control will turn the burner off until the water cools then automatically reset itself. The thermostat sensor is located on the discharge side of the heating coil. The thermostat control dial is located on the control panel.

## Pumps

Use only SAE 10W-40 weight non-detergent oil. Change oil after first 50 hours of use. Thereafter, change oil every three months or at 500 hour intervals. Oil level should be checked through use of dipstick found on top of pump, or the red dot visible through the oil gauge window. Oil should be maintained at that level.

## Cleaning of Coils

In alkaline water areas, lime deposits can accumulate rapidly inside the heating coil. This growth is increased by the extreme heat build up in the coil. The best prevention for liming conditions is to use high quality cleaning chemicals. In areas where alkaline water is an extreme problem, periodic use of Landa Deliming Powder (Landa Part #9-028008) will remove lime and other deposits before coil becomes plugged.

## Deliming Coils

Periodic flushing of coils is recommended.

1. Fill a container with 5 gallons of water, then add 1 lb. of deliming powder. Mix thoroughly.
2. Remove wand assembly from spray gun and put spray gun into container. Secure the trigger on the spray gun into the open position.
3. Remove front middle and right side (passenger side) panels. Detach 3/4" hose from top of heat exchanger, the other end of the hose is attached to the high pressure pump inlet. Place the loose end of the hose in the deliming solution.
4. Turn pump switch on, allowing solution to be pumped through coils back into the container. The solution should be allowed to circulate 2-4 hours or until the color changes.
5. After circulating solution flush entire system with fresh water. Reinstall wand assembly to spray gun, a 3/4" hose and front panels.

## Removal of Soot and Heating Coil

In the heating process, fuel residue in the form of soot deposits may develop on the heating coil pipe and block air flow which will affect burner combustion. When soot has been detected on visual observation, the soot on the coil must be washed off after following the coil removal steps (See Coil Removal page 16).

## Pressure Relief Valve

Each machine is equipped with a relief valve to relieve pressure in the system when higher than normal operating pressures are encountered or if the unloader valve should fail. Unusually high pressures come from an object plugging the spray nozzle. If operating pressure is found to be normal and the relief valve continues to leak, repair or replace valve. **CAUTION: This valve must be opened each year to check operation.**

## Rupture Disk

If pressure from pump or thermal expansion should exceed safe limits, the rupture disk will burst, allowing high pressure to be discharged through hose to ground. The ruptured disk needs to be inspected once or twice a year for any obstructions.

## Fuel

Use clean fuel oil/diesel that is not contaminated with water and debris. Replace fuel filter and drain tank every 100 hours of operation.

Use No. 1 or No. 2 heating oil (ASTM D306) only. **NEVER** use gasoline in your burner fuel tank. Gasoline is more combustible than fuel oil and could result in a serious explosion. **NEVER** use crankcase or waste oil in your burner. Fuel unit malfunction could result from contamination.

## Fuel Control System

This machine utilizes a fuel solenoid valve located on the fuel pump to control the flow of fuel to the combustion chamber. The solenoid, which is normally closed, is activated by a flow switch when water flows through it. When the operator releases the trigger on the spray gun, the flow of water through the flow switch stops, turning off the electrical current to the fuel solenoid.

The solenoid then closes, shutting off the supply of fuel to the combustion chamber. Controlling the flow of fuel in this way gives an instantaneous burn-or-no-burn situation, thereby eliminating high and low water temperatures, and combustion smoke normally associated with machines incorporating a spray gun.

**CAUTION:** Periodic inspection, to insure that the fuel solenoid valve functions properly, is recommended. This can be done by operating the machine and checking to see that the burner is not firing when the spray gun is in the off position.

## Fuel Pressure Adjustment

To control water temperature, adjust fuel pressure by turning the regulating pressure adjusting screw clockwise to increase, counterclockwise to decrease. Do not exceed 200 psi. **NOTE:** When changing fuel pump, a bypass plug must be installed in return port or fuel pump will not prime.

## ELECTRODE SETTING: BECKETT

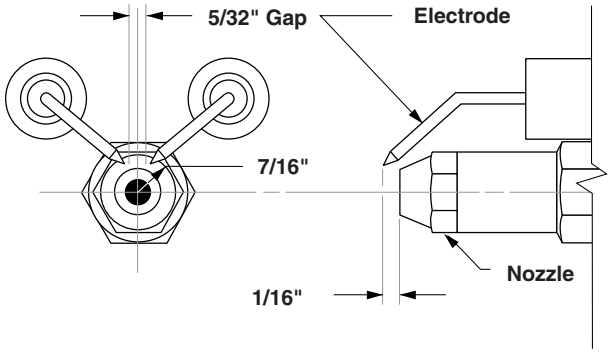

# MAINTENANCE & SERVICE

## Burner Nozzle

Keep the tip free of surface deposits by wiping it with a clean, solvent-saturated cloth, being careful not to plug or enlarge the nozzle. For maximum efficiency, replace the nozzle each season.

## Air Adjustment

The oil burner on this machine is preset for operation at altitudes below 1000 feet. If operated at higher altitudes, it may be necessary to adjust the air band setting. Adjust air band for #1 or # 2 smoke spot on the Bacharach scale. A one-time initial correction for your location will pay off in economy, performance, and extended service life. If a smoky or eye-burning exhaust is being emitted from the stack, two things should be checked. First, check the fuel to be certain that kerosene or No. 1 home heating fuel is being used. Next, check the air adjustment on the burner.

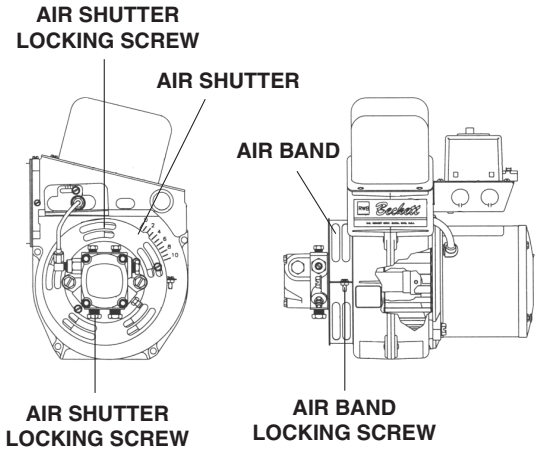


## Adjustment

**To adjust:** start machine and turn burner ON. Loosen two locking screws found in the air shutter openings (refer to illustration) and close air shutter until black smoke appears from burner exhaust vent. Note air band position. Next, slowly open the air shutter until white smoke just starts to appear. Turn air shutter halfway back to the black smoke position previously noted. Tighten locking screws.

If the desired position cannot be obtained using only the air shutter, lock the air shutter in as close a position as can be obtained, then repeat the above procedure on the air band setting.

## Coil Removal

Coil removal, because of freeze breakage or to clean soot from it, can be done quickly and easily.

1. Disconnect hose from pump to inlet side of the coil.
2. Carefully disconnect the thermostat sensor making sure you do not crimp the capillary tube.
3. Remove burner assembly from combustion chamber.
4. Remove the 3-3/8" bolts from each side of coil and tank assembly (these bolts are used to fasten tank to chassis).
5. Remove fittings connected to the 1/2" pipe nipples from inlet and discharge sides of coil.
6. Remove top tank wrap, bend back insulation tabs and fold back blanket.
7. Remove bolts that hold down coil to bottom wrap.
8. Remove coil.
9. Replace or repair the coil and any insulation found to be broken or torn.
10. Remove insulation retainer plates.

## Coil Reinstallation

Reinstall new or cleaned coil reversing Steps 9 through 1.

# PREVENTATIVE MAINTENANCE

This pressure washer was produced with the best available materials and quality craftsmanship. However, you as the owner have certain responsibilities for the correct care of the equipment. Attention to regular preventative maintenance procedures will assist in preserving the performance of your equipment. Contact your dealer for maintenance. Regular preventative maintenance will add many hours to the life of your pressure washer. Perform maintenance more often under severe conditions.

| MAINTENANCE SCHEDULE | | |
|---|---|---|
| Engine Oil | Inspect | Daily |
| | Change | Every 25 hours |
| | Filter | Every 50 hours |
| Air Cleaner | Inspect | Every 50 hours or monthly |
| | Clean | Every 3 months |
| Battery Level | | Check monthly |
| Engine Fuel Filter | | 500 hours or 6 months |
| Spark Plug Maintenance | | 500 hours or 6 months |
| Clean Fuel Tank(s) | | Annually |
| Replace Fuel Lines | | Annually |
| Pump Oil (Non-detergent 10/40W) | Inspect | Oil level daily |
| | Change | After first 50 hours, then every 500 hours or annually |
| Clean Burner Filter | | Monthly (More often if fuel quality is poor) |
| Remove Burner Soot | | Annually |
| Burner Adjustment/Cleaning | | Annually |
| Replace Burner Nozzle | | Annually |
| Descale Coil | | Annually (More often if required) |
| Replace High Pressure Nozzle | | Every 6 months |
| Replace Quick Connects | | Annually |
| Clean Water Screen/Filter | | Weekly |
| Replace HP Hose | | Annually |
| Diverter Valve Cable | | Lube Cable Weekly |

## OIL CHANGE RECORD

**Check** pump oil level before first use of your new Power Washer. **Change** pump oil after first 50 hours and every 3 months or 500 hours thereafter. Use SAE 30 weight oil, non-detergent.

| Date Oil Changed Month/Day/Year | No. Of Operating Hours Since Last Oil Change | Brand Name and Type of Oil (See above) |
|---|---|---|
| | | |
| | | |
| | | |
| | | |
| | | |

# PREVENTATIVE MAINTENANCE

This trailer was produced with the best available materials and quality craftsmanship. However, you as the owner, have certain responsibilities for the correct care of the equipment. Attention to regular preventative maintenance procedures will assist in preserving the performance of your equipment.

| MAINTENANCE SCHEDULE | | |
|---|---|---|
| **Tire Air Pressure** | Inflate to proper pressure indicated on sidewall | Every Trip |
| **Wheel Lugs, Bolts & Nuts** | Tighten to proper torque specifications | Every 3000 mi or 3 mos.* |
| **Wheel** | Check for damage and or out-of-round | Every 6000 mi or 6 mos. |
| **Coupler Ball** | Check for sufficient lube.<br>Check lock mechanism.<br>Check for unusual wear. | Every trip |
| **Safety Chains at Hitch Ball** | Check for abrasion, distortion and general integrity of links. | Every trip |
| **Coupler** | Check for proper fastening & hitch pin in position and secure. | Every trip |
| **Brakes** | Check for proper adjustment & operation | Every trip |
| **Breakaway Switch** | Test switch operation and connections | Every trip |
| **Breakaway Battery** | Pull switch pin, check charge indicator light | Every trip |
| **Load Distribution** | Check load distribution & security | Every trip |
| **Welds** | Check all weld beads for cracks or separations | Every 6000 mi. or 6 mos. |
| **Electrical: Lights & Signals** | Check to make sure all are working properly. Replace burned out bulbs. | Every trip |
| * Check lug nuts for tightness before initial trip, at 10 miles, 25 miles and 50 miles. Recheck at least every 3 months or 3000 miles | | |

## Axles, Hubs and Brakes

Maintenance for axles, hubs and brakes is extremely important for protecting the longevity of your trailer. It is extremely important for your personal safety and the protection of others.

***Please, never shortcut axle, hub and brake service and maintenance.***

LANDA®

# LANDA LIMITED TRAILER WARRANTY

**(Effective April 2011)**

We warrant to the original purchaser that each new part and accessory sold by Landa will be free from manufacturing defects in materials or workmanship in normal service for a period of one (1) year from date of purchase, provided it is installed properly and the equipment maintained in accordance with Landa's instructions and manuals.

Our obligation under this warranty is expressly limited. As to the replacement or repair, at our option, at Landa Inc., Camas, Washington 98607, or at a service facility designated by us, for such part or parts as inspection shall disclose to have been defective.

## EXCLUSIONS:

This warranty does not apply to defects caused by casualty or unreasonable use, including faulty repairs by others and failure to provide reasonable and necessary maintenance.

## THE FOLLOWING ITEMS ARE NOT COVERED BY THIS WARRANTY:

Suspension axles, hubs, drums, brakes, bearings and seals. These are subject to the warranties, if any of their manufacturers.

WE SHALL NOT BE LIABLE FOR SPECIAL, INDIRECT, INCIDENTAL, OR CONSEQUENTIAL DAMAGES OF ANY KIND, including but not limited to labor costs or transportation charges in connection with the replacement or repair of defective parts.

ANY IMPLIED OR STATUTORY WARRANTIES, INCLUDING WARRANTY OF MERCHANTABILITY OR FITNESS FOR A PARTICULAR PURPOSE, ARE EXPRESSLY LIMITED TO THE DURATION OF THIS WRITTEN WARRANTY. We make no other express warranty, nor is anyone authorized to make any in our behalf.

Some states do not allow limitations on how long an implied warranty lasts or the exclusion or limitation of incidental or consequential damages, so the above limitation or exclusion may not apply to you.

This warranty gives you specific legal rights and you may also have other rights which vary from state to state.

## TO OBTAIN WARRANTY SERVICE:

Purchaser must bring the trailer to an authorized Landa Dealership. For the dealership nearest you consult our web page: www.landa.com.

LANDA®

Form #9.801-316.0 • Landa ECOS 7000 Operator Manual • Rev 4/12 • Printed in U.S.A. or Mexico